REV.	DESCRIPTION	ECN NO.	NAME	DATE

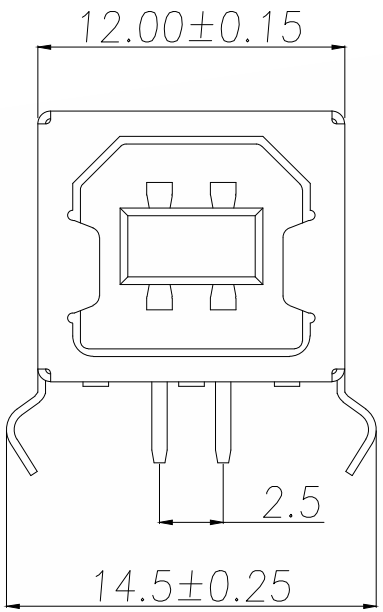

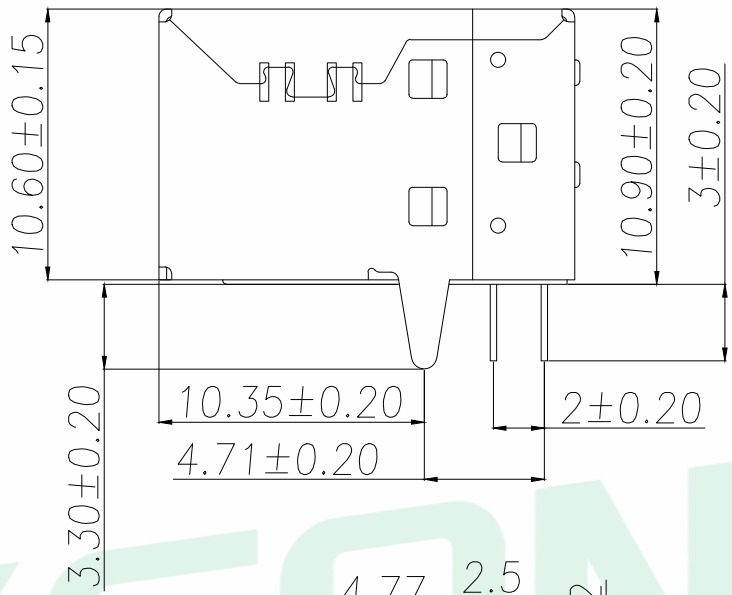

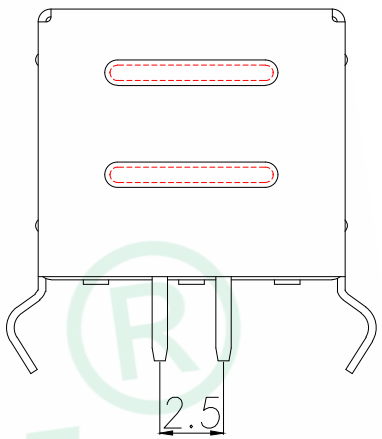

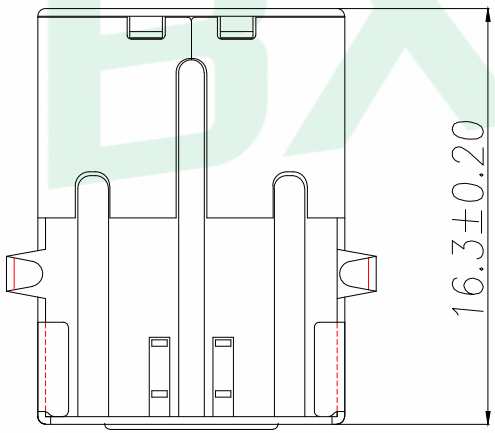

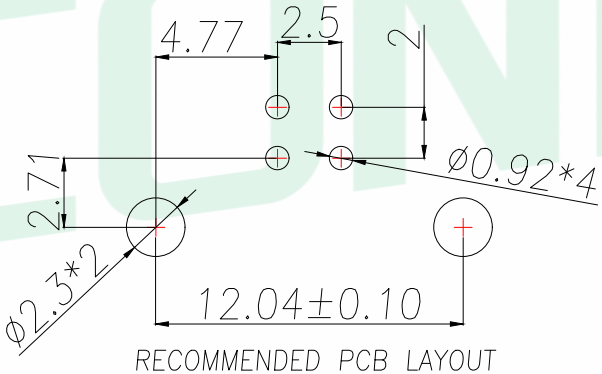

RECOMMENDED PCB LAYOUT

GENERAL TOLERANCE ±0.05

Specifications:
Electrical:
1.Current Rating
1.5A/contact terminal
2.Voltage Rating
30V DC
3.Contact Resistance
30 milliohms MAX
4.Dielectric Withstanding Voitage:
500 V AC AT Sea Levol
5.Lnsulation Resistance:
1000MEGA ohms MIN
Mechanical:
1.Cnnector Mate and Unmate Force
Mate force:3.75kgf(MAX)
Unmate force:1.02kgf(MIN)
2.Terminal Retenion
1.2kgf(MIN)
Matorial:
1.Housing:
Hing Temperature Tnermaplastics,
Ul 94V-0 PBT White
2.Contact:Copper Alloy C2680
3.Shell: Copper Alloy C2680/SPCC
Finish:
1.Contact: Piated Gold in Mating Area;
Tin On Solder Talls.
2.Shell:
Nickel Plating

GENERAL TOLERANCE						DONGGUAN BAOXUN PRECISION TECHNOLOGY CO., LTD		BXCONN®
DIM.	TOL.					TITLE: USB B/F 90°DIP(弯脚)		
x.	±0.30							
x.x	±0.20							
x.xx	±0.10							
GENERAL ANGLE:						DWG. NO.: Type-B-BF-90	CHECKED: MAX	
x.°	±3.0°							
x.x°	±2.0°							
x.xx°						PART NO.: Type-B-BF-90	DRAWN: ELLA	
		UNIT: mm	SCALE: none	SHEET: 1of 1	DWG. SIZE: A4	LAYER: bxconn	APPROVED: WILL	