LXXX 15.00/01/90 4.5SN GY BX

Weidmüller Interface GmbH & Co. KG
Klingenbergstraße 26
D-32758 Detmold
Germany

www.weidmueller.com

Product image



Similar to illustration

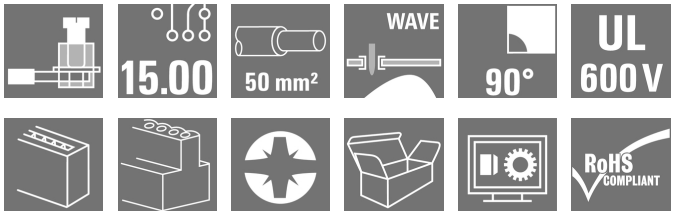

The high-current PCB connection for more power on board: 150 A /1000 V with wires up to 50 mm², transmitted right to the PCB!

The LXXX 15.0 – with its proven steel clamping-yoke technology in a compact standard housing – integrates the latest market requirements for security, power density and miniaturization in power electronics. It connects these requirements into an efficient solution for the entire value-creation chain – including development, production, installation and maintenance.

The function and form of the application's connection method plays a key role. It influences the application's design, reliability, usability and costs. With the Substitution of
For example, with the replacement of complex constructions involving bolts or bus bars, the PCB can be transformed into a system platform that is both consistent and sustainable into the future – even for high-current applications.

The LXXX 15.0 reduces size and complexity while at the same time improving application integration. In so doing, it fulfils the requirements of power electronics better than the established mechanisms and connection elements.

General ordering data

Version	Printed circuit board terminals, 15.00 mm, Number of poles: 1, 90°, Solder pin length (l): 4.5 mm, tinned, Pebble grey, Clamping yoke connection, Clamping range, max. : 50 mm², Box
Order No.	1047200000
Type	LXXX 15.00/01/90 4.5SN GY BX
GTIN (EAN)	4032248783953
Qty.	20 pc(s).
Product data	IEC: 1000 V / 150 A / 0.5 - 50 mm² UL: 600 V / 126 A / AWG 20 - AWG 1
Packaging	Box

LXXX 15.00/01/90 4.5SN GY BX

Weidmüller Interface GmbH & Co. KG
Klingenbergstraße 26
D-32758 Detmold
Germany

www.weidmueller.com

Technical data

Dimensions and weights

Depth	31 mm	Depth (inches)	1.22 inch
Height	56 mm	Height (inches)	2.205 inch
Height of lowest version	51.5 mm	Width	16 mm
Width (inches)	0.63 inch	Net weight	30 g

System parameters

Product family	OMNIMATE Power - series LXXX	Wire connection method	Clamping yoke connection
Mounting onto the PCB	THT solder connection	Conductor outlet direction	90°
Pitch in mm (P)	15 mm	Pitch in inches (P)	0.591 inch
Number of poles	1	Pin series quantity	1
Fitted by customer	No	Solder pin length (l)	4.5 mm
Solder pin dimensions	1.2 x 1.2 mm	Solder eyelet hole diameter (D)	1.6 mm
Solder eyelet hole diameter tolerance (D)	+ 0,1 mm	Number of solder pins per pole	4
Screwdriver blade	1.2 x 6.5	Screwdriver blade standard	DIN 5264
Tightening torque, min.	2.5 Nm	Tightening torque, max.	4 Nm
Clamping screw	M 6	Stripping length	18 mm
L1 in mm	0 mm	L1 in inches	0 inch
Protection degree	IP20		

Material data

Insulating material	Wemid (PA)	Colour	Pebble grey
Colour chart (similar)	RAL 7032	Insulating material group	I
Comparative Tracking Index (CTI)	≥ 600	UL 94 flammability rating	V-0
Contact material	Copper alloy	Contact surface	tinned
Layer structure of solder connection	1.5...3 µm Ni / 4...6 µm Sn matt	Storage temperature, min.	-40 °C
Storage temperature, max.	70 °C	Operating temperature, min.	-50 °C
Operating temperature, max.	120 °C	Temperature range, installation, min.	-25 °C
Temperature range, installation, max.	120 °C		

Conductors suitable for connection

Clamping range, min.	0.5 mm²
Clamping range, max.	50 mm²
Wire connection cross section AWG, min.	AWG 20
Wire connection cross section AWG, max.	AWG 1
Solid, min. H05(07) V-U	0.5 mm²
Solid, max. H05(07) V-U	16 mm²
Stranded, min. H07V-R	6 mm²
Stranded, max. H07V-R	50 mm²
Flexible, min. H05(07) V-K	0.5 mm²
Flexible, max. H05(07) V-K	35 mm²
w. plastic collar ferrule, DIN 46228 pt 4, min.	0.5 mm²
w. plastic collar ferrule, DIN 46228 pt 4, max.	35 mm²
w. wire end ferrule, DIN 46228 pt 1, min.	0.5 mm²
w. wire end ferrule, DIN 46228 pt 1, max.	35 mm²

LXXX 15.00/01/90 4.5SN GY BX

Weidmüller Interface GmbH & Co. KG
Klingenbergstraße 26
D-32758 Detmold
Germany

www.weidmueller.com

Technical data

Clampable conductor	Cross-section for conductor connection	Type	fine-wired	
		nominal	2.5 mm²	
	wire end ferrule	Stripping length	nominal	20 mm
		Recommended wire-end ferrule	H2,5/25D BL	
		Stripping length	nominal	18 mm
		Recommended wire-end ferrule	H2,5/18	
	Cross-section for conductor connection	Type	fine-wired	
		nominal	4 mm²	
	wire end ferrule	Stripping length	nominal	20 mm
		Recommended wire-end ferrule	H4,0/26D GR	
		Stripping length	nominal	18 mm
		Recommended wire-end ferrule	H4,0/18	
	Cross-section for conductor connection	Type	fine-wired	
		nominal	6 mm²	
	wire end ferrule	Stripping length	nominal	20 mm
		Recommended wire-end ferrule	H6,0/26 SW	
		Stripping length	nominal	18 mm
		Recommended wire-end ferrule	H6,0/18	
	Cross-section for conductor connection	Type	fine-wired	
		nominal	10 mm²	
	wire end ferrule	Stripping length	nominal	21 mm
		Recommended wire-end ferrule	H10,0/28 EB	
		Stripping length	nominal	18 mm
		Recommended wire-end ferrule	H10,0/18	
	Cross-section for conductor connection	Type	fine-wired	
		nominal	16 mm²	
	wire end ferrule	Stripping length	nominal	21 mm
		Recommended wire-end ferrule	H16,0/28 GN	
		Stripping length	nominal	18 mm
		Recommended wire-end ferrule	H16,0/18	
	Cross-section for conductor connection	Type	fine-wired	
		nominal	1.5 mm²	
	wire end ferrule	Stripping length	nominal	20 mm
		Recommended wire-end ferrule	H1,5/24 R	
		Stripping length	nominal	18 mm
		Recommended wire-end ferrule	H1,5/18	
	Cross-section for conductor connection	Type	fine-wired	
		nominal	35 mm²	
	wire end ferrule	Stripping length	nominal	19 mm
		Recommended wire-end ferrule	H35,0/32D R	
		Stripping length	nominal	18 mm
		Recommended wire-end ferrule	H35,0/18	
	Cross-section for conductor connection	Type	fine-wired	
		nominal	50 mm²	
	wire end ferrule	Stripping length	nominal	18 mm
		Recommended wire-end ferrule	H50,0/18	

LXXX 15.00/01/90 4.5SN GY BX

Weidmüller Interface GmbH & Co. KG
Klingenbergstraße 26
D-32758 Detmold
Germany

www.weidmueller.com

Technical data

Reference text	Length of ferrules is to be chosen depending on the product and the rated voltage., The outside diameter of the plastic collar should not be larger than the pitch (P)

Rated data acc. to IEC

Rated current, min. number of poles (Tu=20°C)	150 A	Rated current, min. number of poles (Tu=40°C)	150 A
Rated voltage for surge voltage class / pollution degree II/2	1,000 V	Rated voltage for surge voltage class / pollution degree III/2	1,000 V
Rated voltage for surge voltage class / pollution degree III/3	1,000 V	Rated impulse voltage for surge voltage class/ pollution degree II/2	8 kV
Rated impulse voltage for surge voltage class/ pollution degree III/2	8 kV	Rated impulse voltage for surge voltage class/ contamination degree III/3	8 kV

Rated data acc. to CSA

Institute (CSA)		Certificate No. (CSA)	200039-1198743
Rated voltage (Use group B / CSA)	600 V	Rated voltage (Use group C / CSA)	600 V
Rated voltage (Use group D / CSA)	600 V	Rated current (Use group B / CSA)	127 A
Rated current (Use group C / CSA)	127 A	Rated current (Use group D / CSA)	5 A
Wire cross-section, AWG, min.	AWG 20	Wire cross-section, AWG, max.	AWG 1
Reference to approval values	Specifications are maximum values, details - see approval certificate.		

Rated data acc. to UL 1059

Institute (UR)		Certificate No. (UR)	E60693
Rated voltage (Use group B / UL 1059)	600 V	Rated voltage (Use group C / UL 1059)	600 V
Rated current (Use group B / UL 1059)	126 A	Rated current (Use group C / UL 1059)	126 A
Wire cross-section, AWG, min.	AWG 20	Wire cross-section, AWG, max.	AWG 1
Reference to approval values	Specifications are maximum values, details - see approval certificate.		

Packing

Packaging	Box	VPE length	127 mm
VPE width	82 mm	VPE height	64 mm

Classifications

ETIM 6.0	EC002643	ETIM 7.0	EC002643
ETIM 8.0	EC002643	ECLASS 9.0	27-44-04-01
ECLASS 9.1	27-44-04-01	ECLASS 10.0	27-44-04-01
ECLASS 11.0	27-46-01-01	ECLASS 12.0	27-46-01-01

LXXX 15.00/01/90 4.5SN GY BX

Weidmüller Interface GmbH & Co. KG
Klingenbergstraße 26
D-32758 Detmold
Germany

www.weidmueller.com

Technical data

Important note

IPC conformity	Conformity: The products are developed, manufactured and delivered according international recognized standards and norms and comply with the assured properties in the data sheet resp. fulfill decorative properties in accordance with IPC-A-610 "Class 2". Further claims on the products can be evaluated on request.
Notes	• Additional variants on request • Rated current related to rated cross-section & min. No. of poles. • Wire end ferrule without plastic collar to DIN 46228/1 • Wire end ferrule with plastic collar to DIN 46228/4 • P on drawing = pitch • Rated data refer only to the component itself. Clearance and creepage distances to other components are to be designed in accordance with the relevant application standards. • IP 20 from 16 mm² to 50 mm² • The test point can only be used as potential-pickup point. • Wire-end ferrules are mandatory for stranded wires with more than 19 strands. • Long term storage of the product with average temperature of 50 °C and average humidity 70%, 36 months

Approvals

Approvals	
ROHS	Conform
UL File Number Search	UL Website
Certificate No. (UR)	E60693

Downloads

Approval/Certificate/Document of Conformity	Declaration of the Manufacturer
Engineering Data	CAD data – STEP
Engineering Data	EPLAN, WSCAD
User Documentation	QR-Code product handling video
Catalogues	Catalogues in PDF-format
Brochures	FL DRIVES EN MB DEVICE MANUF. EN FL DRIVES DE FL APPL_INVERTER EN FL_BASE_STATION_EN FL ELEVATOR EN FL POWER SUPPLY EN FL 72H SAMPLE SER EN PO OMNIMATE EN

LXXX 15.00/01/90 4.5SN GY BX

Weidmüller Interface GmbH & Co. KG
Klingenbergstraße 26
D-32758 Detmold
Germany

www.weidmueller.com

Drawings

Dimensional drawing

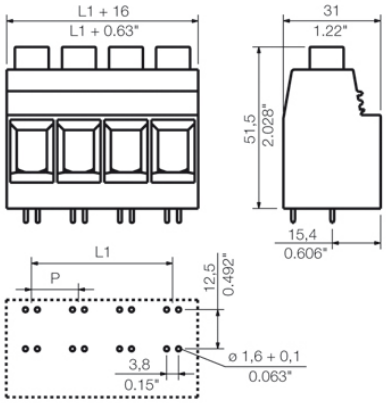

Graph

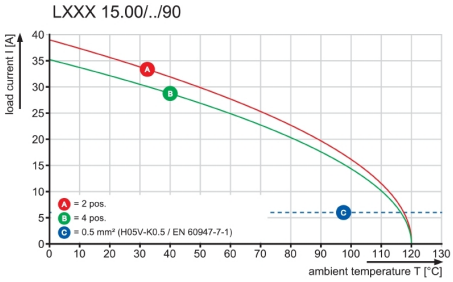

Graph

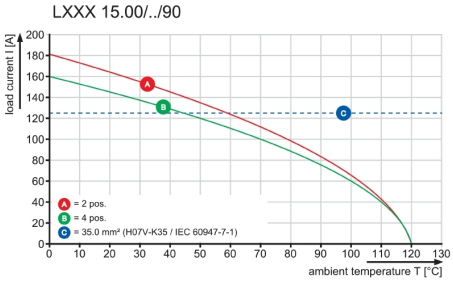

Graph

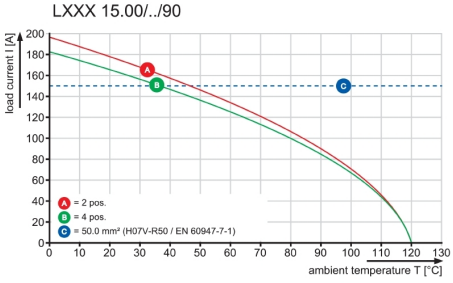

Product benefits

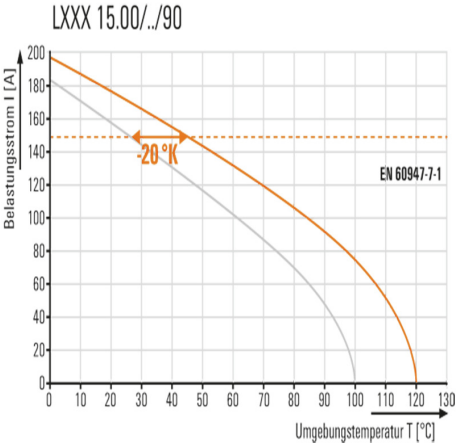

Increased power reserves
Optimised application safety

LXXX 15.00/01/90 4.5SN GY BX

Weidmüller Interface GmbH & Co. KG
Klingenbergstraße 26
D-32758 Detmold
Germany

www.weidmueller.com

Drawings



Standard-compliant integration

Dimensions without tolerances are no check dimensions

The English version is binding

The reproduction, distribution and utilization of this document as well as the communication of its contents to others without explicit authorization is prohibited.
Offenders will be held liable for the payment of damages. Weidmueller exclusively reserves the right to file for patents, utility models or designs.
© Weidmueller Interface GmbH & Co. KG

LXXX 15.00/04/90...

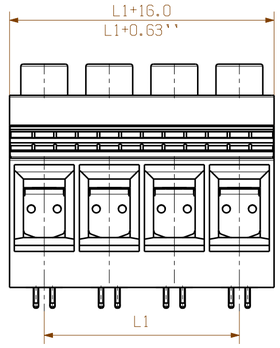

TEST PLUG PS 2.0
ORDER NO. 031000 0000

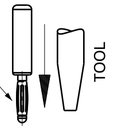

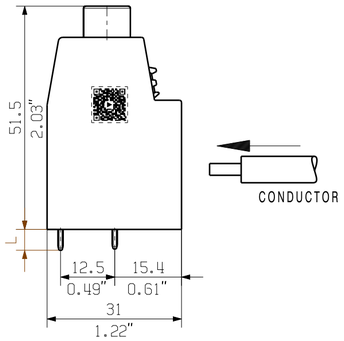

CONDUCTOR

HOLE PATTERN

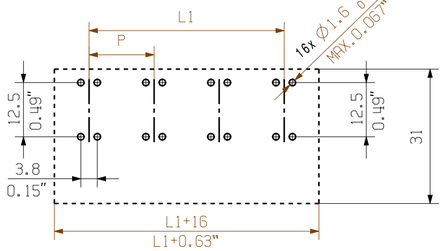

LXXX 15.00/04/90F...

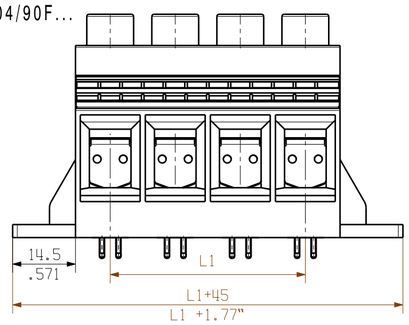

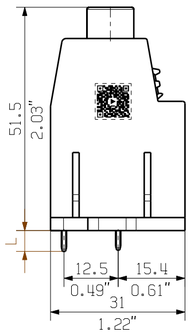

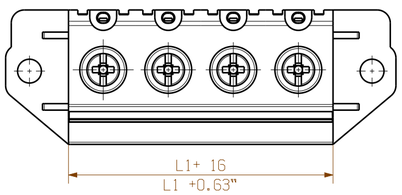

HOLE PATTERN

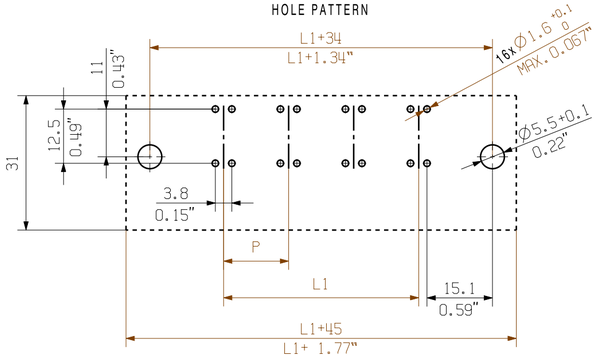

Customer drawing

LXXX 15.00/04/90FL...

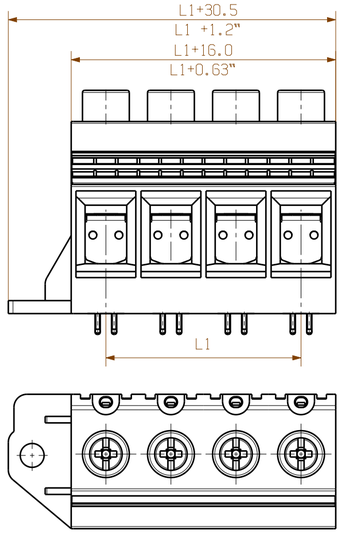

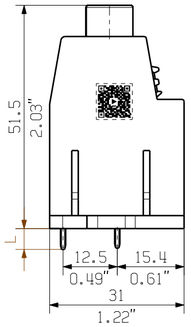

HOLE PATTERN

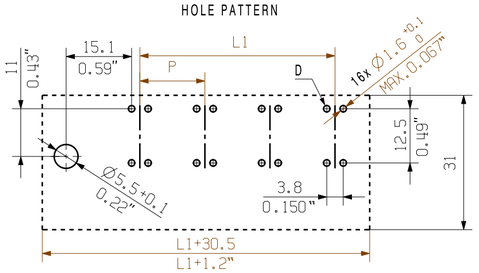

LXXX 15.00/04/90FR...

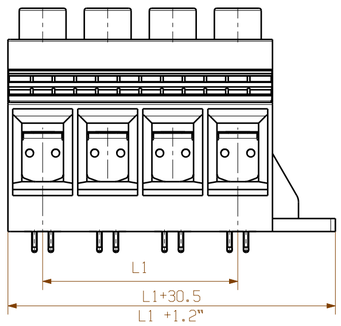

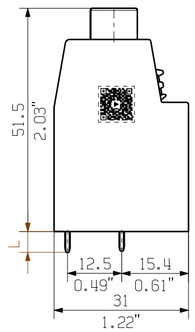

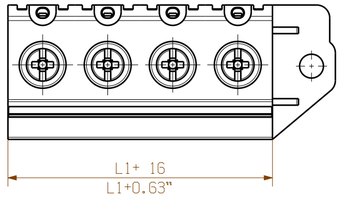

HOLE PATTERN

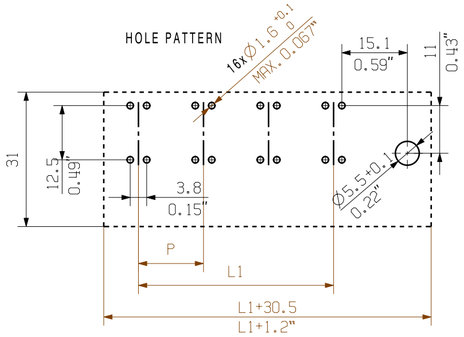

LXXX 15.00/04/90...
M 1:1

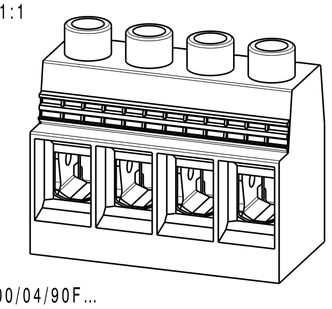

LXXX 15.00/04/90F...
M 1:1

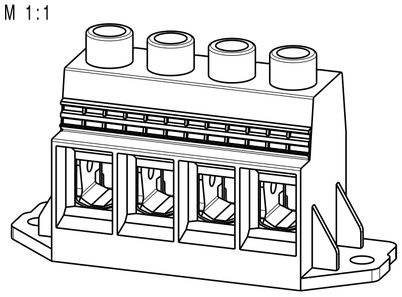

LXXX 15.00/04/90FL...
M 1:1

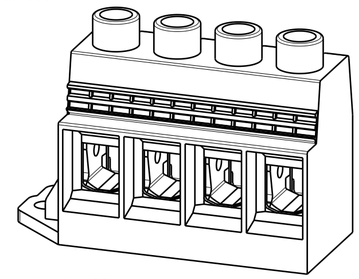

LXXX 15.00/04/90FR...
M 1:1

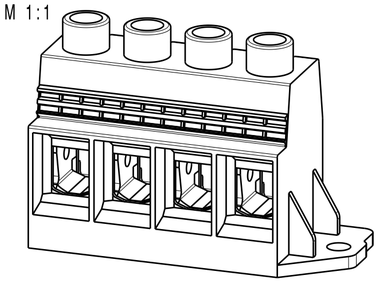

n= No. of poles
L= 4.8 $^{0}_{-0.35}$
P= Pitch

For the mounting of PCBs, it should be noted that the rated data relates only to the PCB components alone. The necessary creepage and clearance paths must be observed in connection with the respective applicant in accordance to IEC 60664-1 (VDE 0110).
The current-carrying capacity and pitch tolerance is to be determined according to DIN IEC 60326-3 very fine.

Weidmüller PCB components are tested to the IEC 60947-7-4 standard, and are valid for its field of application. Provided that the components are used to the intended purpose, all requirements with respect to the occuring of electrical, mechanical, thermic and corrosive stress will be satisfied.

n	L1[mm]	L1[inch]
9	120	1.372
8	105	1.313
7	90	1.254
6	75	1.195
5	60	1.136
4	45	1.77
3	30	1.18
2	15	0.59

GENERAL TOLERANCE:
DIN ISO 2768-m

RoHS COMPLIANT

EC00000683 00
.
First Issue Date
14.05.2018

Max. nos.
Modification

Prim PLM Part No.: 004587
Prim ERP Part No.: 1047150000

Weidmüller

46279 Drawing no. 5 Issue no.
Sheet 01 of 01 sheets

	Date	Name
Drawn	03.12.2018	Xiang, Keqin
Responsible		Xiang, Keqin
Approved	04.12.2018	Xu, Shary

Scale: 1/1 Size: A2
Drawings Assembly

LXXX 15.00/.../90...
LEITERPLATTENKLEMME
PCB TERMINAL

Product file: 7082 LXXX 15.00

Wave Solder Profile

Recommended wave solderding profiles

Weidmüller Interface GmbH & Co. KG
Klingenbergstraße 16
D-32758 Detmold
Germany
Fon: +49 5231 14-0
Fax: +49 5231 14-292083
www.weidmueller.com

Single Wave:

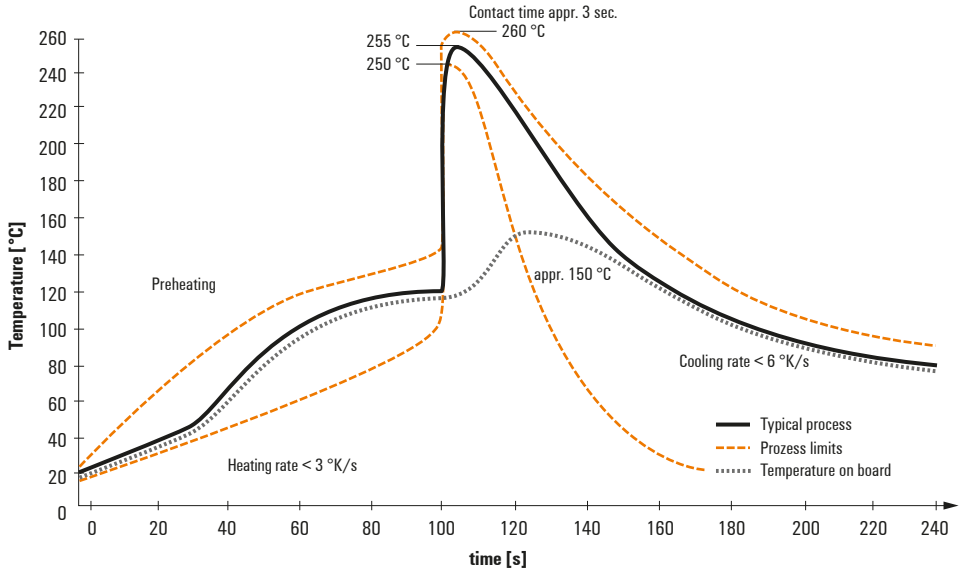

Double Wave:

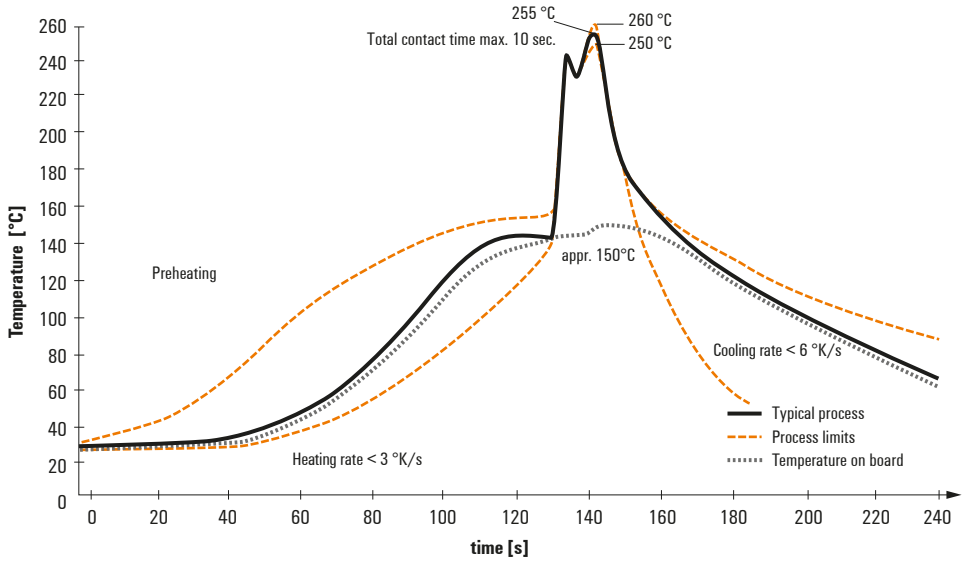

Wave soldering profiles

Wired connection elements should be processed in accordance with the DIN EN 61760-1 standard. We have included two recommendations for practical wave soldering profiles, with which Weidmüller PCB terminals and connectors are qualified.

When choosing a suitable profile for your application, the following factors also need to be considered:
- PCB thickness
- Proportion of Cu in the layers
- Single/double-sided assembly
- Product range
- Heating and cooling rates

The single and double wave profiles each indicate the recommended operating range, including the maximum soldering temperature of 260°C. In practice, the maximum soldering temperature is quite often well below the above maximum profile.

We reserve the right to make technical changes.