附页 1/ attached sheet I:

承认规格/Recognized specifications

序号 Code	客户料号 CUSTOMER P.N.	特锐祥料号 TRX P.N.	产品描述 Product description	封装代码 Package code
1	/	TMY1100J	SMD-Y1SL100J/AC400V	7854
2	/	TMY1220J	SMD-Y1SL220J/AC400V	7854
3	/	TMY1330J	SMD-Y1SL330J/AC400V	7854
4	/	TMY1470J	SMD-Y1SL470J/AC400V	7854
5	/	TMY1680J	SMD-Y1SL680J/AC400V	7854
6	/	TMY1101K	SMD-Y1Y5P101K/AC400V	7854
7	/	TMY1151K	SMD-Y1Y5P151K/AC400V	7854
8	/	TMY1221K	SMD-Y1Y5P221K/AC400V	7854
9	/	TMY1271K	SMD-Y1Y5P271K/AC400V	7854
10	/	TMY1331K	SMD-Y1Y5P331K/AC400V	7854
11	/	TMY1471K	SMD-Y1Y5P471K/AC400V	7854
12	/	TMY1471M	SMD-Y1Y5U471M/AC400V	7854
13	/	TMY1681M	SMD-Y1Y5U681M/AC400V	7854
14	/	TMY1102M	SMD-Y1Y5U102M/AC400V	7854
15	/	TMY1152M	SMD-Y1Y5U152M/AC400V	7854
16	/	TMY1222M	SMD-Y1Y5V222M/AC400V	7854
备注	根据陶瓷材料材质区分为：SL 代表 CLASS I 系列；Y5P/Y5U/Y5V 代表 CLASS II 系列。			

附页 2/ attached sheet II:

TRX 常规 SMD-Y1.CAP 容值范围及温度特性区分

Capacitance Range and T.C Differentiation:（Unit:pF）

关于 Y1 交流陶瓷固定电容器承认书规格型号说明：

Specification and model description of Y1 AC ceramic fixed capacitor:

T.C	10	22	33	47	68	100	150	220	270	330	470	680	1000	1500	2200
SL															
2B(Y5P)															
2E(Y5U)															
2F(Y5V)															
U_R	400V.ac														
工作温度范围 Operating Temperature	-40℃ to 125℃														
气候类别 Climatic category	40/ 125/ 21														

适用于连接一个额定电压不超过 1000V 的交流电，标称频率不超过 100Hz 的电子电气设备。

About Y AC ceramic fixed capacitor acknowledgement specifications description:

Y a.c. ceramic capacitors are used in electrical and electronic equipment and connected an a.c. main with nominal voltage not exceeding 1000va.c, and with a nominal frequency not exceeding 100Hz.

目录/CONTENT

1. 品名
Product Name ----------5
2. 产品印标
Product marking ----------5-6
3. 日期代码
Date code ----------6
4. 认证证书
Certificates ----------7
5. 产品结构
Product structure ----------7-8
6. 推荐焊接条件
Recommended soldering condition ----------8-9
7. 性能和测试方法
Performance and test methods ----------9-15
8. 电容温度特性
Capacitor temperature characteristic ----------15
9. 有毒有害物质含量控制要求
Content of toxic and harmful substances control requirements ---------16
10.贮存条件
Storage conditions ----------16
11.产品包装
Product Packing ----------17-18
12.注意事项
Application notes ----------19

（注：本次准承认共　　款）

1.品名/Product Name

T M Y1 101 K
① ② ③ ④ ⑤

No.	代码 Code	说明 Explanation
①	T	TRX 系列 TRX series
②	M	封装代码(7854) Package code(7854)
③	Y1	安规类别 Safety class
④	101	容量：前两位表示有效数字，最后一位为乘方数。 Capacitance：The first two digits represent significant numbers, and the last digit is a multiplier. (eg: 101=10×10^1=100pF)
⑤	K	容差/Capacitance tolerance J(±5%) / K(±10%) / M(±20%)

以上提到的各种代码为本公司规定标准应用！
Various code mentioned above for the company standard application!

2.产品印标/Product marking

Marking	四川产品打标 Sichuan product marking	安徽产品打标 Anhui product marking
		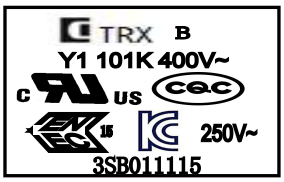

日期代码/Date code：3SB011115

3： 有 3 代表安徽工厂；无 3 代表四川工厂
The number 3 represents the Anhui factory.
The Sichuan plant does not have the number 3

S：2024 年(按 TRX 制造日期代码)；
2024(By TRX manufacturing date code);

B：高温锡膏；
High temperature solder paste

01：机台编号（TRX 产线追溯）；
Machine Number(TRX production line traceability)

11：11 月（01-12）
November(01-12)

15：15 号（01-31）
15 th(01-31)

说明/Explanation		
TRX	公司注册商标/品牌 registered trademark / brand	
B	介质代码 / code of Dielectric SL / B(Y5P) / E(Y5U) / F(Y5V)	
Y1	安规类别 Safety class	
101	容量 / Capacitance (10-2200pF : 100-222)	
K	容差/Capacitance tolerance J(±5%)/K(±10%)/M(±20%)	
400V~	UL CQC ENEC 电压 voltage for UL CQC ENEC	
c UL us	UL 认证	安规认证标志 Safety certification mark
CQC	CQC 认证	
ENEC 15	ENEC 认证	
KC	KC 认证	
250V~	KC 电压 voltage for KC	
SB011115 / 3SB011115	四川日期代码/安徽日期代码 Sichuan date code/Anhui date code	

3.日期代码/Date code

年代码 code of year				月代码 code of month		日代码 code of day			
year	code	year	code	month	code	day	code	day	code
		2020	M	1	01	1	01	16	16
		2021	N	2	02	2	02	17	17
2010	A	2022	P	3	03	3	03	18	18
2011	B	2023	R	4	04	4	04	19	19
2012	C	2024	S	5	05	5	05	20	20
2013	D	2025	T	6	06	6	06	21	21
2014	E	2026	U	7	07	7	07	22	22
2015	F	2027	V	8	08	8	08	23	23
2016	H	2028	W	9	09	9	09	24	24
2017	J	2029	X	10	10	10	10	25	25
2018	K			11	11	11	11	26	26
2019	L			12	12	12	12	27	27
						13	13	28	28
						14	14	29	29
						15	15	30	30
								31	31

注：年份代码每 20 年为一周期重复一次。

Note: the year code repeats once every 20 years for a one-week period.

4.认证证书/Certificates

认证证书/certificates				
认证机构 Certification	持证方 Certificate holder	证书号 Certificate number	参考标准 Standard number	认证电压 Certified voltage
UL/CUL	四川/安徽	E315719	ANSI/UL 60384-14 CAN/CSA E60384-14	250/400/500Vac
CQC	四川	CQC17001176740	GB/T 6346.14-2023	250/400Vac
	安徽	CQC24001441788		
ENEC	四川/安徽	ENEC-05541	EN IEC 60384-14:2023	250/400/500Vac
KC	四川/安徽	SU03127-21001A	KC 60384-1(2015-09) KC 60384-14(2015-09)	250Vac

5.产品结构/ Product structure

5.1 产品尺寸/Product Dimension

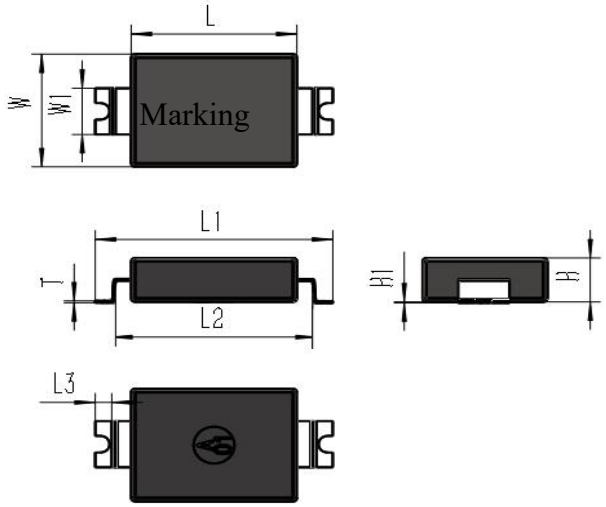

产品尺寸 Product Dimension(mm)			
L	7.8±0.1	W1	2.5±0.05
W	5.4±0.1	T	0.13±0.02
H	2.45 max	H1	0.1+0.1/-0.05
L1	9.6±0.2	L3	0.4 min
L2	8.4+0.5/-0.2 (内侧测量)		

5.2 产品构造/Product structure

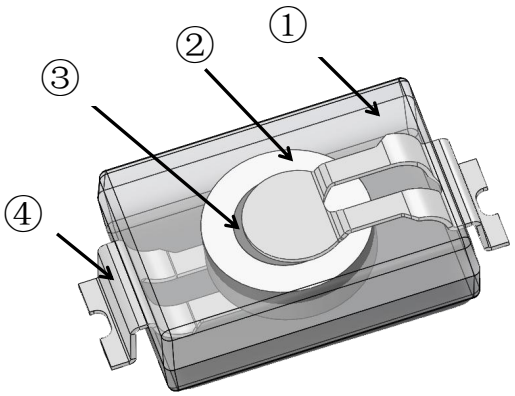

No.	名称 Part name	材料 Material
①	包封层 Coating	环氧树脂(UL94V-0) Epoxy molding compound (UL94V-0)
②	芯片 Chip	陶瓷芯片 Ceramic chip
③	焊料 Solder	Sn-Pb-Ag 焊料 Sn-Pb-Ag solder
④	引脚 Lead Pin	铜合金 Copper alloy
		镀锡层 Tin coating

5.3 推荐焊盘/Solder Pad dimension

下面是回流焊的推荐焊接尺寸。尺寸 a 是为了保证设备要求的安全标准爬行距离。

The recommended solder pad dimensions for reflow soldering are as follows. "a" is to ensure the creepage distance required by the safety standard applied to your equipment.

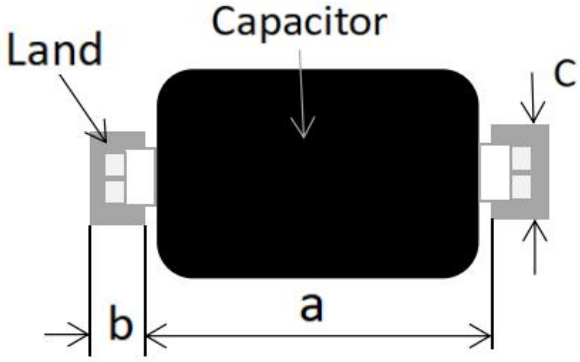

封装尺寸 Package Dimension	a(mm)	b(mm)	c(mm)
7.8×5.4	8.0min	2.2±0.1	3.6±0.1

6.推荐焊接条件/ Recommended soldering condition

6.1 回流焊/Reflow Soldering

焊接电容器时，应在以下条件下进行，且连续焊接次数不能大于三次。
When soldering capacitor, it should be performed in following conditions.and the continuous welding times shuld not exceed three times.

焊接温度：最大 260±5℃
Soldering temperature：260±5℃

焊接时间：最大 120 秒。
Soldering time：120s max.

预热温度：最大 150℃。
Preheating temperature：150℃ max.

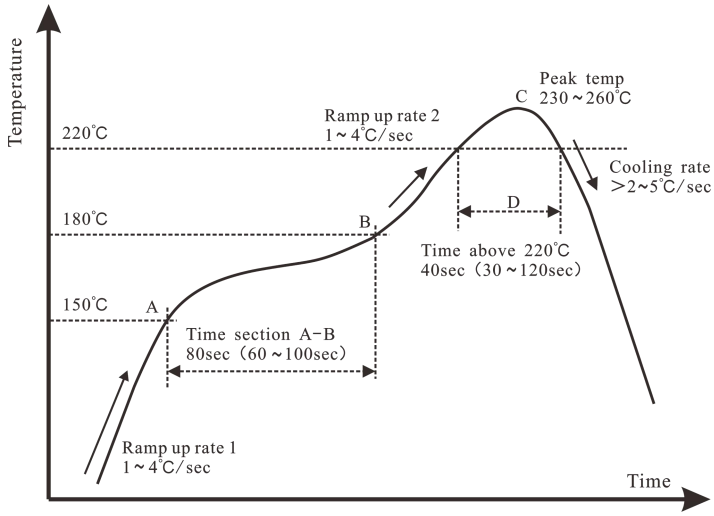

推荐回流焊曲线图/Recommended reflow soldering curve chart

6.2 波峰焊/Wave Soldering

焊接电容器时，应在以下条件下进行，且连续焊接次数不能大于三次。
When soldering capacitor, it should be performed in following conditions.and the continuous welding times shuld not exceed three times.

焊接温度：最大 260±5℃
Soldering temperature：260±5℃

焊接时间：最大 10 秒。
Soldering time：10s max.

预热温度：最大 100℃。
Preheating temperature：100℃ max.

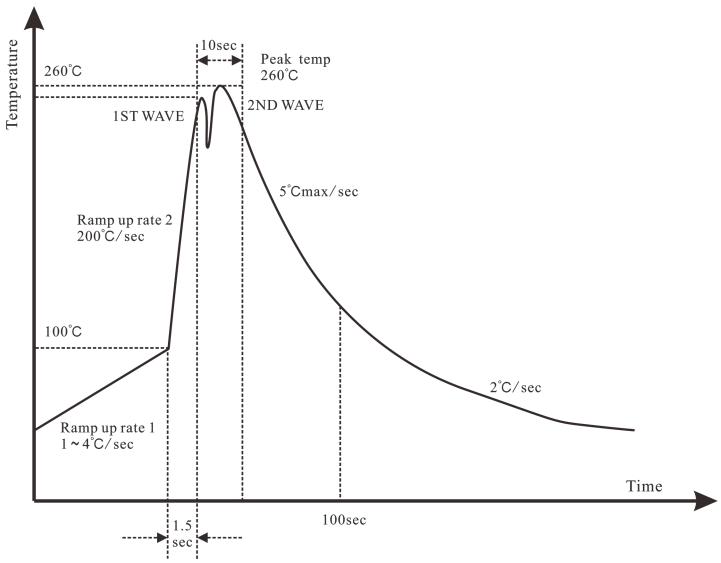

推荐波峰焊曲线图/Recommended Wave Soldering curve chart

6.3 烙铁焊/Soldering Iron

将本产品焊接至 PCB/PWB 时，不得超过电容器的焊接耐热性规格。将本产品过度加热可能会熔化内部连接焊料，并可能导致热冲击，从而导致陶瓷元件开裂。

When soldering this product to a PCB/PWB, do not exceed the solder heat resisitance specification of the capacitor. Subjecting this product to excessive heating could melt the internal junction solder and may result in thermal shocks that can crack the ceramic element.

用烙铁焊接电容器时，应在下列条件下进行。
When soldering capacitor with a soldering iron, it should be performed in following conditions.

烙铁尖温度：最大 400℃。
Temperature of iron-tip：400℃ max.

烙铁瓦数：最大 50 瓦。
Soldering iron wattage：50W max.

焊接时间：最大 5 秒。
Soldering time：5s max.

7.性能和测试方法/ Performance and test methods

NO	项目 Item		规范 Specification	测试方法 test method
1	外观 Appearance		无可见损伤 标记清晰完整 引脚无氧化、表面无杂物 No visible damage Legible marking Lead pin is not oxidation and its surface is without sundries.	肉眼或放大镜 unaided eye or magnifier
2	尺寸 Dimensions		详见 5.1 See 5.1 for details	使用卡尺和千分尺 Using calipers and micrometers
3	耐压 Voltage proof	引脚之间 Between lead pin	无永久性击穿或飞弧 No permanent breakdown or flashover	测试电压/test voltage: 4000VAC 频率/frequency: 50/60Hz 持续时间/duration: 60s 漏电流/leakage current: 5mA max
		绝缘体 Body insulation		

<table>
<tr><th>NO</th><th colspan="2">项目
Item</th><th>规范
Specification</th><th>测试方法
test method</th></tr>
<tr><td>4</td><td colspan="2">电容量
Capacitance</td><td>在规定的公差范围内
Within the specified tolerance.
J: ±5%
K: ±10%
M: ±20%</td><td>温度/Temperature: 25±3°C
湿度/Humidity: 55±30%RH
电压/Voltage: 1.0±0.2Vrms
频率/Frequency:
ClassI(SL): 1±0.2MHZ
ClassII(Y5P,Y5U,Y5V): 1±0.2KHZ</td></tr>
<tr><td>5</td><td colspan="2">损耗因子
D.F.</td><td>在规定的公差范围内
Within the specified tolerance
SL:≤1.0%
Y5P: ≤2.5%
Y5U: ≤2.5%
Y5V: ≤2.5%</td><td>温度/Temperature: 25±3°C
湿度/Humidity: 55±30%RH
电压/Voltage: 1.0±0.2Vrms
频率/Frequency:
ClassI (SL): 1±0.2MHZ
ClassII(Y5P,Y5U,Y5V): 1±0.2KHZ</td></tr>
<tr><td>6</td><td colspan="2">温度特性
TCC</td><td>SL:+350~-1000(ppm/°C)
Y5P: ±10%
Y5U: +22%~-56%
Y5V: +22%~-82%</td><td>温度特性/TCC: ±2°C
<table>
<tr><td>step</td><td>1</td><td>2</td><td>3</td><td>4</td><td>5</td></tr>
<tr><td>Tem(°C)</td><td>+20</td><td>-25</td><td>+20</td><td>+85</td><td>+20</td></tr>
</table>
△=（C_X-C_0）/C_0
C_X : capacitor for step2,4
C_0 : capacitor for step 3</td></tr>
<tr><td rowspan="2">7</td><td rowspan="2">绝缘电阻
I.R.</td><td>引脚之间
Between lead pin</td><td>10000MΩ MIN</td><td rowspan="2">用 DC500±50V 充电 60±5s 来测量绝缘电阻。电压应通过 1MΩ 的电阻器施加到电容器上.
The insulation resistance shall be measured with DC500±50V within 60±5s of charging. The voltage should be applied to the capacitor through a resistor of 1MΩ.</td></tr>
<tr><td>绝缘体
Body insulation</td><td>10000MΩ MIN</td></tr>
</table>

NO	项目 Item		规范 Specification	测试方法 test method
8	耐焊接热 Resistance to soldering heat	目视检查 visual examination	无可见损伤 no visible damage	回流条件（峰值）/Reflow(peak)：260±5℃ 焊接区/Solder zone：230℃ min. 20-40s. 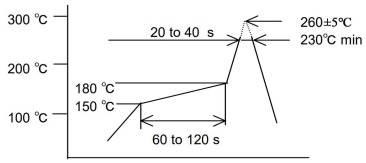 •预处理/Pre-treatment 电容器应在 125±3℃下存放 1 小时，并施加 AC4000V(r.m.s.) 60s，然后在初始测量前在室温下放置 24±2 小时。 The capacitor should be stored at 125 ± 3℃ for 1 hour and subjected to AC4000V (r.m.s.) for 60 seconds. Then, it should be left at room temperature for 24 ± 2 hours before initial measurement. •后处理/Post-treatment 电容器应在室温下储存 24±2 小时。 Capacitor should be stored for 24±2h at *room condition.
		容量变化 Capacitance change	SL:±5% Y5P:±10% Y5U:±20% Y5V:±20%	
		损耗因子 D.F.	SL:≤1.0% Y5P:≤2.5% Y5U:≤2.5% Y5V:≤2.5%	
		绝缘电阻 I.R.	见 NO.7 Pass the item NO.7	
		耐压 voltage proof	见 NO.3 Pass the item NO.3	
9	温度 快速变化 Rapid change of temperature	外观 Appearance	无可见损伤 No visible damage	•预处理/Pre-treatment 电容器应在 125±3℃下存放 1 小时，并施加 AC4000V(r.m.s.) 60s，然后在初始测量前在室温下放置 24±2 小时。 The capacitor should be stored at 125 ± 3℃ for 1 hour and subjected to AC4000V (r.m.s.) for 60 seconds. Then, it should be left at room temperature for 24 ± 2 hours before initial measurement. 上限类别温度 upper category temperature : +125±3°C 下限类别温度 lower category temperature : -40±3°C 循环次数/number of cycles : 5 在温度范围的曝光时间 duration of exposure at the temperature limits：30min 测量前电容应放置在 25±3℃下 24±2 小时 Capacitor shall be placed at 25±3°C for 24±2h before initial measurements.
		容量变化 Capacitance change	SL:±5% Y5P: ±10% Y5U: ±20% Y5V: ±20%	
		损耗因子 D.F.	SL:≤1.0% Y5P: ≤2.5% Y5U:≤2.5% Y5V: ≤2.5%	
		绝缘电阻 I.R.	≥3000MΩ	
		耐压 voltage proof	见 NO.3 Pass the item NO.3	

NO	项目 Item		规范 Specification	测试方法 test method
10	可焊性 Solderability		包锡良好（上锡率 90%以上），在 3 秒内流合。 Good tin coating (tin rate above 90%), within 3 seconds of convergence.	将电容器浸入乙醇(JIS K 8101)和松香(JIS K 5902)溶液中(松香重量比例为 25%)。(参考) Immerse the capacitor in the solution of ethanol (JIS K 8101) and rosin (JIS K 5902) (25% rosin in weight proportion). (Reference) 在焊料溶液中浸泡 2±0.5s。 Immerse in solder solution for 2±0.5s. 焊料温度 Temp. of solder: 245±10°C
11	抗振性 Vibration resistance		电容器无可见损伤 Capacitor shall not visible damage SL:±5% Y5P: ±10% Y5U: ±15% Y5V: ±15% DF ≦2.5%	频率范围 Frequency rangs: 10→55→10Hz 振幅/swing:1.5mm 总时间为 6 小时 The total duration shall be 6 hours 在 X，Y，Z 曝光时间为 2 小时 duration of exposure at X,Y,Z : 2hours
12	湿热 (稳态) Damp heat (steady state)	目视检查 visual examination	无可见损伤 No visible damage	•预处理/Pre-treatment 电容器应在 125±3℃下存放 1 小时，并施加 AC4000V(r.m.s.) 60s，然后在初始测量前在室温下放置 24±2 小时。 The capacitor should be stored at 125 ± 3 ℃ for 1 hour and subjected to AC4000V (r.m.s.) for 60 seconds. Then, it should be left at room temperature for 24 ± 2 hours before initial measurement. 测试温度/test temperature : 40±3℃ 湿度/humidity : 95±3%RH 持续时间/duration : 21d 电压：一半的样本加 U_R(400V)，另一半不加电压。 voltage: Apply U_R(400V) to half of the samples and no voltage to the other half. 测量前电容应放置在 25±3℃下 24±2 小时 capacitor shall be placed at 25±3°Cfor 24±2hours before measurements.
		电容量 Capacitance	△=(C_X-C_0)/C_0 SL△: ±5% Y5P△: ±10% Y5U△: ±15% Y5V△: ±15%	
		损耗因子 D.F.	SL:≤1.0% Y5P: ≤5.0% Y5U:≤5.0% Y5V: ≤5.0%	
		绝缘电阻 I.R.	≥3000MΩ	
		耐压 voltage proof	见 NO.3 Pass the item NO.3	

NO	项目 Item		规范 Specification	测试方法 test method
13	耐久性 Endurance	目视检查 visual examination	无可见损伤 No visible damage	•预处理/Pre-treatment 电容器应在 125±3℃下存放 1 小时，并施加 AC4000V(r.m.s.) 60s，然后在初始测量前在室温下放置 24±2 小时。 The capacitor should be stored at 125 ± 3℃ for 1 hour and subjected to AC4000V (r.m.s.) for 60 seconds. Then, it should be left at room temperature for 24 ± 2 hours before initial measurement. 承受 8KV 脉冲 3 次 Subjected to 8KVimpulses for three times. 测试温度/Test temperature : 125±3°C 持续时间/Duration : 1000^{+24}_{-0} hours 测试电压: 680 VAC（$1.7U_R$），此外，每小时将电压升至 1000V（有效值）并持续 0.1 秒。 Test voltage : 680VAC（$1.7U_R$），except that once every hour the voltage shall be increased to 1000v r.m.s. for 0.1s. 电压通过 47Ω±5%电阻施加到每个电容上。 Each of these voltage shall be applied To each capacitor individually through a resistor of 47Ω±5%. 测量前电容应放置在 25±3℃下 24±2 小时 Capacitor shall be placed at 25±3°C for 24±2hours before measurements.
		电容量 Capacitance	$\triangle=(C_X-C_0)/C_0$ SL△: ±5% Y5P△: ±10% Y5U△: ±15% Y5V△: ±15%	
		损耗因子 D.F.	SL:≤1.0% Y5P: ≤5.0% Y5U:≤5.0% Y5V: ≤5.0%	
		绝缘电阻 I.R.	≥3000MΩ	
		耐压 voltage proof	见 NO.3 Pass the item NO.3	

NO	项目 Item	规范 Specification	测试方法 test method
14	脉冲电压 Impulse voltage	试验期间没有永久性击穿或飞弧 No permanent breakdown or flashover during the test period.	脉冲峰值电压 Peak impulse voltage : 8.0KV 脉冲间隔时间 Impulses distance : ＞10s 脉冲次数 Impulses times : 24
		如果连续三次的冲击示波器监测显示有波形表明电容器未发生自愈性击穿，则可以停止施加脉冲，电容器应算作合格。 If any three successive impulses are shown by the oscilloscope monitor to have had a waveform indicating that no self-healing breakdowns or flashovers have taken place in the capacitor, then no further impulses shall be applied and the capacitor shall be counted as conforming.	
		如果施加全部 24 次脉冲后，显示 3 个或更多的波形表示未发生自愈性击穿，电容器应算作合格。 If all 24 impulses have been applied to the capacitor and 3 or more of them are of a waveform indicating that no self-healing breakdowns or flashovers have occurred, then the capacitor shall be counted as conforming.	
		如果规定波形的脉冲少于三个，则电容器应视为不合格项目。 If less than three impulses are of the required waveform, then the capacitor shall be counted as a nonconforming item.	
15	阻燃性 Passive flammability	燃烧时间不应超过 10 秒。 The burning time should not be exceeded the time 10s. 纸巾不应着火。 The tissue paper should not ignite.	被测电容器应置于火焰外焰处。且每个样品只能燃烧一次。置于火焰时间：10 秒。 The capacitor under test shall be held in the flame in the position which best promotes burning. Each specimen shall only be exposed once to the flame. Time of exposure to flame : 10 s. 火焰长度/Length of flame : 12±1mm 燃气燃烧器：最小长度 35 毫米。 Gas burner : Length 35mm min. 内径/Inside dia : 0.5±0.1mm 外径/Outside dia : 0.9mm max. 气体：丁烷气体纯度至少为 95%。 Gas : Butane gas purity 95% min. 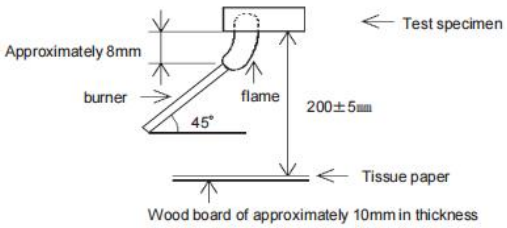

NO	项目 Item	规范 Specification	测试方法 test method
16	耐溶剂性 Component solvent Resistanc	无可见损伤 No visible damage. 按照 NO.3~NO.7 性能 Performance according to No.3 ~ No.7	使用的溶剂：30±5%异丙醇和 70±5%微化物 Solvent to be used: 30±5%alcohol and 70±5%fluxional compound 溶剂温度/Solvent temperature: 23±5℃ 电容器应浸没在溶剂中 5±0.5 分钟。 The capacitor shall be immerged in solvent for 5±0.5minutes. 恢复时间/Recovery time: 8hours
17	标志耐溶剂性 Solvent resistance of the marking	标志应清晰 The marking shall be legible	使用的溶剂：30±5%异丙醇和 70±5%微化物 Solvent to be used: 30±5%alcohol and 70±5%fluxional compound 溶剂温度/Solvent temperature: 23±5℃ 电容器应浸没在溶剂中 5±0.5 分钟，用纱布擦拭标志 10 次。 The capacitor shall be immerged in solvent for 5±0.5minutes and its markshall be wiped with pledget for 10times.

8.电容温度特性/Capacitor temperature characteristic

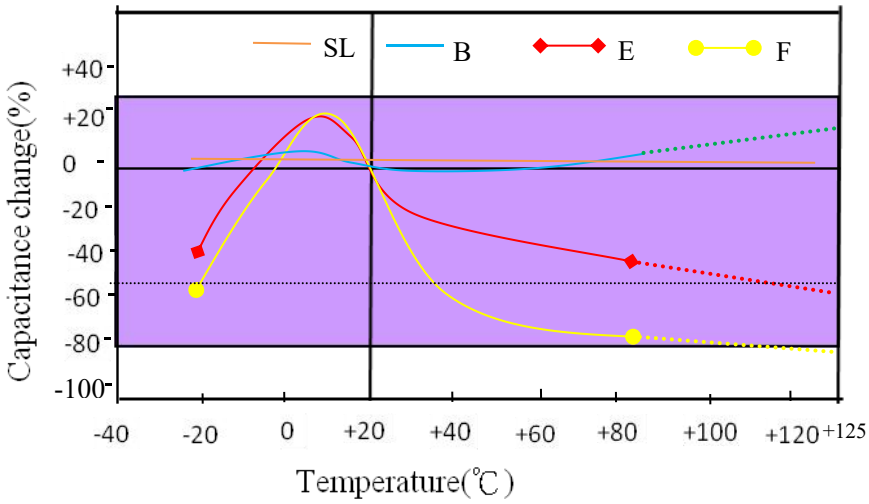

9.有毒有害物质含量控制要求/Content of toxic and harmful substances control requirements

RoHS2.0 2011/65/EU

halogen 卤素

REACH No190 7/2006

RoHS H.F.
REACH

物质名称 Substances	含量 concentration (unit: ppm)
镉及镉化合物/Cadmium and cadmium compounds	<100
铅及铅化合物/Lead and lead compounds	<1000
汞及汞化合物/Mercury and mercury compounds	<1000
铬及铬化合物/Hexavalent chromium compounds	<1000
多溴联苯 PBBS/Polubrominated biphenyls	<1000
多溴联苯醚 PBDES/Polubrominated diphenylethers	<1000
镉+铅+汞+六价铬/Cd+Pb+ Hg + Cr+6(packing materials)	<100
氯/Cl	<900
溴/Br	<900
氯+溴/Cl+Br	<1500
REACH 高度关注物质 SVHC Substances of Very High Concern (SVHC) of REACH	以 TRX 最新 REACH 报告为准 The latest reach report of TRX shall prevail

10.贮存条件/Storage conditions

⑴.绝缘环氧树脂模制电容器未形成完美的密封；因此，不要在腐蚀性的环境中使用或储存电容器，尤其是氯化物气体、硫化物气体、酸、碱、盐或类似物质都存在的环境，还要避免暴露在潮湿的环境中。为了避免水分的吸收，电容器应包装在防潮的密封袋里。

The insulating Epoxy molded capacitors does not form a perfect seal; therefore, do not use or store capacitors in a corrosive atmosphere, especially where chloride gas,sulfide gas. acid, alkali, salt or the like are present. And avoid exposure to moisture. So, in order to avoid the absorption of moisture, capacitors are packed in moisture-proof envelope.

⑵.电容器应在以下条件中储存，并在交付后 24 个月内使用。

Store the capacitors in the following conditions at all times,and use within 24 months after delivered.

温度/Temperature: 10 ～30℃

湿度/Humidity: 60%max.

⑶.在打开防潮包装后 168 小时内焊接封闭电容器。打开后，将电容器储存在装有干燥剂和湿敏卡的防潮包装中，并保持上述状态。

Solder the enclosed capacitors within 168 hours after opening the moisture-proof package. After opening, store the capacitors in moisture-proof package with a desiccant and HIC card and keep the above condition.

⑷.如果储存期超过 12 个月或打开包装后封闭湿敏卡的指示颜色发生变化，则在焊接前进行烘烤（60℃×168 小时）

In case the storage period has been exceeded 12 months or the indicator color of a enclosed HIC card has changed when the package has been opened, perform baking (60℃x168hr)before soldering.

11.产品包装/Product Packing

11.1 载带尺寸/Dimension of tape

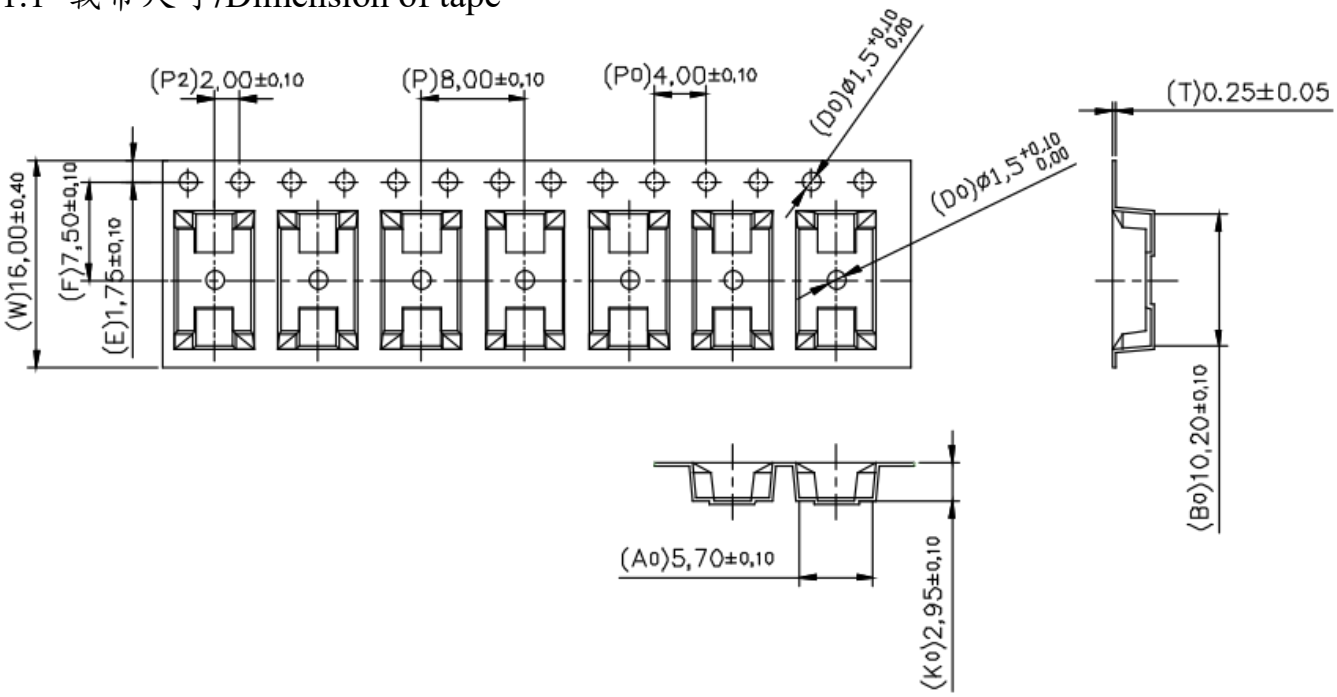

11.2 卷盘尺寸/Dimension of Reel

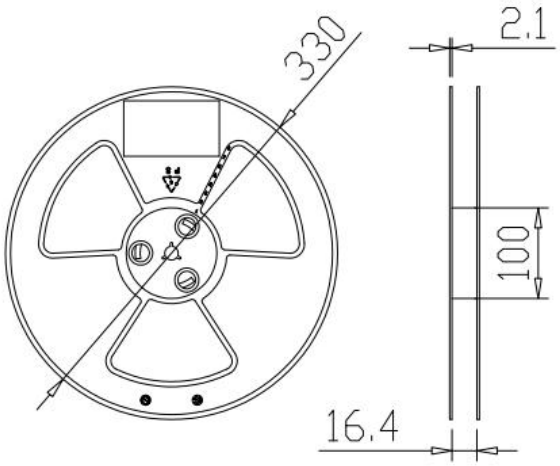

REEL	REEL SIZE
3000pcs	13inch

11.3 剥离强度/Peeling off force

Item	Data	Remark
Cover tape adhesion	10～100g	Carrier tape and cover tape open angle 165～180° F=300± 5mm/minute

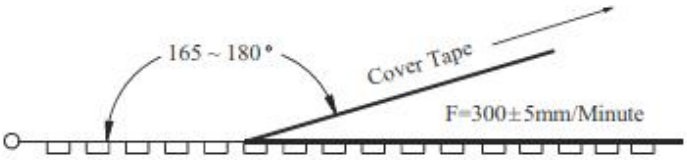

11.4 包装数据表/Product Packaging Scheme

内包装/inner-packaging:

内盘标签/Inner disc label

TRX 料号

卷盘尺寸/Reel Size: 13inch
3.0KPCS/Reel

四川产品信息标签
/Sichuan Product Information Label

安徽产品信息标签
/Anhui Product Information Label

密封袋上的标签
/Label on Sealed bag

湿敏标签
/Humidity sensitive label

项目/Item	
TRX.Des	物料描述
P/N	客户料号
Mfr	特锐祥料号
D/C	生产日期
Lot.No	生产批号
Q~TY	数量
SPEC	规格

外包装/Outer-packaging:

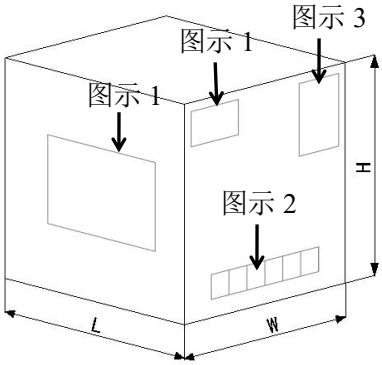

图示 1/Figure 1

图示 2/Figure 2

图示 3/Figure 3

尺寸(mm) Dimension			数量 Quantity	外箱重量 Out Box Weight
L	W	H	39KPCS	≈17KG
365	358	304		

包装示意图/Package sketch:

外箱/Out Box

13 卷盘/盒/13 Reel/Box

托盘尺寸(长/宽/高)
Pallet Size(L/W/H)
1100*1100*90mm

堆放体积(长/宽/高)
Stacking volume(L/W/H)
1100*1100*1600mm

备注：1. 包装箱上的“5”是堆叠层数不能超过 5 层；2. PALLET 包装& 远距离运输时 WRAPPING；3. 50cm 以上高度不可抛落下；4. 常温/常湿保管。

Remark:1.The 5 on the packing is stacked layers can't more than 5 layers; 2. Pallets packaging & long-distance transport should be warpping; 3.50 cm above the height of the parcel do not drop; 4. Normal temperature / humidity keeping.

12.注意事项/Application notes

① 用户进行的重复耐电压试验可能损坏电容器，故试验后的电容器不可以当合格品再使用。
Attention is drawn to the fact that repetition of the voltage proof test by the user may damage the capacitor.

② 电容器在 PCB 板上安装时要求 PCB 板焊盘需与电容器管脚贴焊点吻合，相反可能会导致电容器与 PCB 板焊接不良，电容器管脚变形或本体破坏而损坏电容器。
Capacitors mounted on a printed circuit board (PCB) requirements of PCB board welding disc required and capacitor pin paste solder joint agreement, the opposite may cause the capacitor and the PCB board to bad welding and capacitor tube deform the feet or body destruction and damage the capacitor.

③ 避免任何挤压，弯折，外部撞击。
Avoid any compressive, tensile or flexural stress.

④ 在电容器上进行树脂成型时，应事先咨询我司相关技术人员。
Please consult us first if you wish to embed the capacitor in plastic resins.

⑤ 焊接于 PCB 板的电容器不可用力移动或将本体用力倾斜。
Do not move the capacitor after it has been soldered to the board.

⑥ 不可用焊接于 PCB 板后的电容将板提取，可能破坏电容焊接和包封层破损。
Do not pick up the PC board by the soldered capacitor.

⑦ 废弃物处理在处理电容器时，必须由具有相应许可证的工业废弃物供应商焚烧或掩埋。
When capacitors are disposed of, they must be burned or buried by an industrial waste vendor with the appropriate licenses.