Description

The HIRF7313TRPBFuses advanced trench technology to provide excellent $R_{DS(ON)}$, low gate charge and operation with gate voltages as low as 2.5V. This device is suitable for use as a Battery protection or in other Switching application.

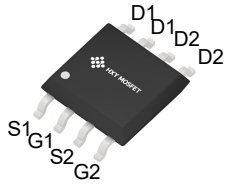

SOP-8
(SOIC-8)

General Features

V_{DS} = 30V I_D = 6A
$R_{DS(ON)}$ < 30mΩ @ V_{GS}=10 V
$R_{DS(ON)}$ < 42mΩ @ V_{GS}=4.5V

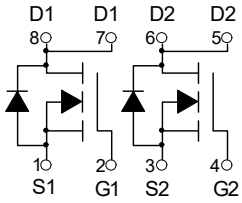

Dual N-Channel MOSFET

Application

Battery protection

Load switch

Uninterruptible power supply

Ordering Information

Product ID	Pack	Brand	Qty(PCS)
HIRF7313TRPBF	SOP-8(SOIC-8)	HXY MOSFET	3000

Absolute Maximum Ratings@T_j=25°C(unless otherwise specified)

Symbol	Parameter	Rating	Units
V_{DS}	Drain-Source Voltage	30	V
V_{GS}	Gate-Source Voltage	±20	V
I_D@T_A=25℃	Drain Current, V_{GS} @ 4.5V[3]	6	A
I_D@T_A=70℃	Drain Current, V_{GS} @ 4.5V[3]	5	A
I_{DM}	Pulsed Drain Current[1]	30	A
P_D@T_A=25℃	Total Power Dissipation	2	W
T_{STG}	Storage Temperature Range	-55 to 150	℃
T_J	Operating Junction Temperature Range	-55 to 150	℃
Rthj-a	Maximum Thermal Resistance, Junction-ambient[3]	62.5	℃/W

Electrical Characteristics (T_J=25℃, unless otherwise noted)

Symbol	Parameter	Conditions	Min	Typ	Max	Units
Static Parameters						
BV_{DSS}	Drain-Source Breakdown Voltage	I_D=-250μA, V_{GS}=0V	30			V
I_{DSS}	Zero Gate Voltage Drain Current	V_{DS}=30V, V_{GS}=0V			1	μA
		T_J=55℃			5	
I_{GSS}	Gate-Body leakage current	V_{DS}=0V, V_{GS}=±20V			±100	nA
$V_{GS(th)}$	Gate Threshold Voltage	V_{DS}=V_{GS} I_D=250μA	1.2	1.8	2.4	V
$I_{D(ON)}$	On state drain current	V_{GS}=10V, V_{DS}=5V	30			A
$R_{DS(ON)}$	Static Drain-Source On-Resistance	V_{GS}=10V, I_D=6A		25	30	mΩ
		T_J=125℃		40	48	
		V_{GS}=4.5V, I_D=5A		33	42	mΩ
g_{FS}	Forward Transconductance	V_{DS}=5V, I_D=6A		15		S
V_{SD}	Diode Forward Voltage	I_S=1A,V_{GS}=0V		0.76	1	V
I_S	Maximum Body-Diode Continuous Current				2.5	A
Dynamic Parameters						
C_{iss}	Input Capacitance	V_{GS}=0V, V_{DS}=15V, f=1MHz		255	310	pF
C_{oss}	Output Capacitance			45		pF
C_{rss}	Reverse Transfer Capacitance			35	50	pF
R_g	Gate resistance	V_{GS}=0V, V_{DS}=0V, f=1MHz	1.6	3.25	4.9	Ω
Switching Parameters						
$Q_{g(10V)}$	Total Gate Charge	V_{GS}=10V, V_{DS}=15V, I_D=6A		5.2	6.3	nC
$Qg_{(4.5V)}$				2.55	3.2	nC
Q_{gs}	Gate Source Charge			0.85		nC
Q_{gd}	Gate Drain Charge			1.3		nC
$t_{D(on)}$	Turn-On DelayTime	V_{GS}=10V, V_{DS}=15V, R_L=2.5Ω, R_{GEN}=3Ω		4.5		ns
t_r	Turn-On Rise Time			2.5		ns
$t_{D(off)}$	Turn-Off DelayTime			14.5		ns
t_f	Turn-Off Fall Time			3.5		ns
t_{rr}	Body Diode Reverse Recovery Time	I_F=6A, dI/dt=100A/μs		8.5		ns
Q_{rr}	Body Diode Reverse Recovery Charge	I_F=6A, dI/dt=100A/μs		2.2		nC

A. The value of $R_{\theta JA}$ is measured with the device mounted on 1in^2 FR-4 board with 2oz. Copper, in a still air environment with T_A =25℃. The value in any given application depends on the user's specific board design.

B. The power dissipation P_D is based on $T_{J(MAX)}$=150℃, using ≤ 10s junction-to-ambient thermal resistance.

C. Repetitive rating, pulse width limited by junction temperature $T_{J(MAX)}$=150℃. Ratings are based on low frequency and duty cycles to keep initialT_J=25℃.

D. The $R_{\theta JA}$ is the sum of the thermal impedence from junction to lead $R_{\theta JL}$ and lead to ambient.

E. The static characteristics in Figures 1 to 6 are obtained using <300μs pulses, duty cycle 0.5% max.

F. These curves are based on the junction-to-ambient thermal impedence which is measured with the device mounted on 1in^2 FR-4 board with 2oz. Copper, assuming a maximum junction temperature of $T_{J(MAX)}$=150℃. The SOA curve provides a single pulse ratin g.

Typical Electrical And Thermal Characteristics

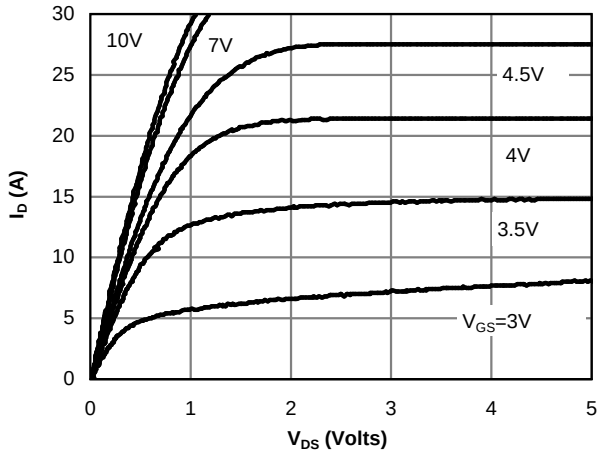

Fig 1: On-Region Characteristics (Note E)

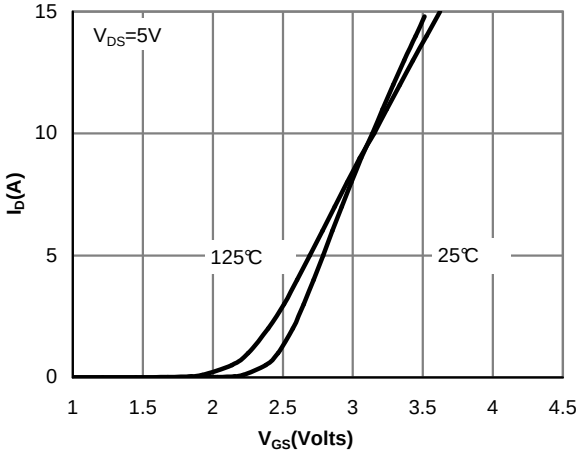

Figure 2: Transfer Characteristics (Note E)

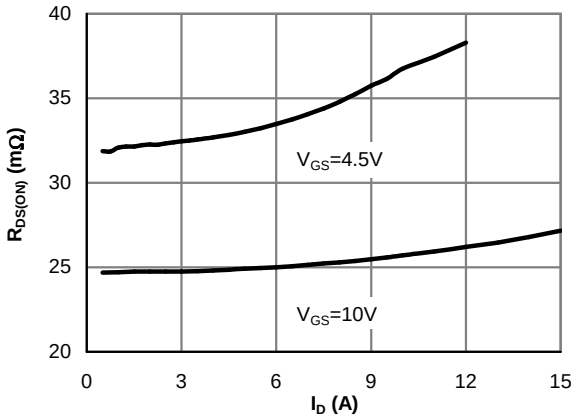

Figure 3: On-Resistance vs. Drain Current and Gate Voltage (Note E)

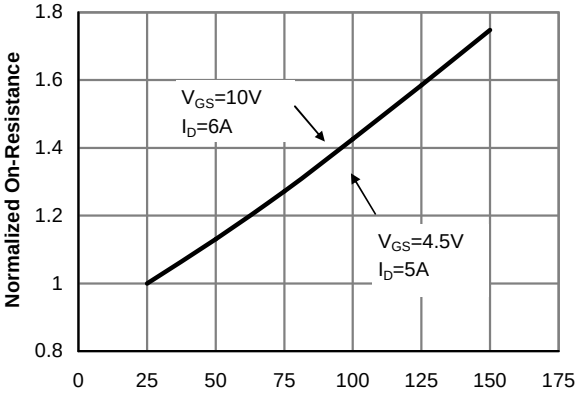

Figure 4: On-Resistance vs. Junction Temperature (Note E)

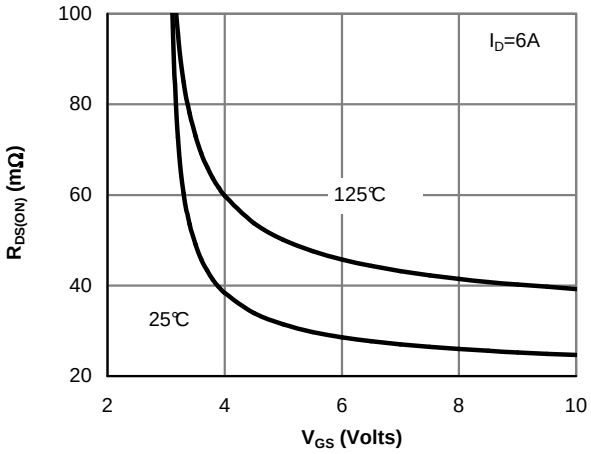

Figure 5: On-Resistance vs. Gate-Source Voltage (Note E)

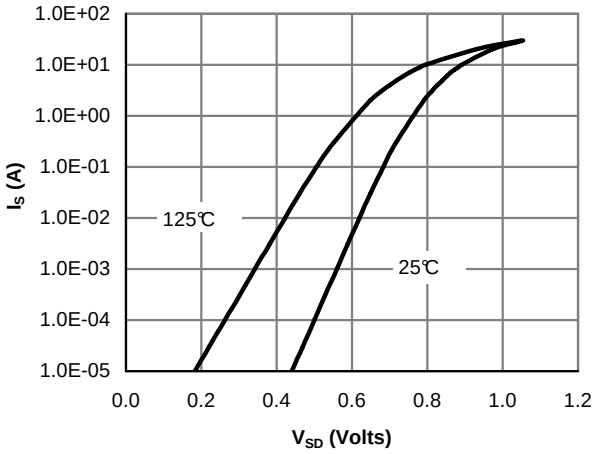

Figure 6: Body-Diode Characteristics (Note E)

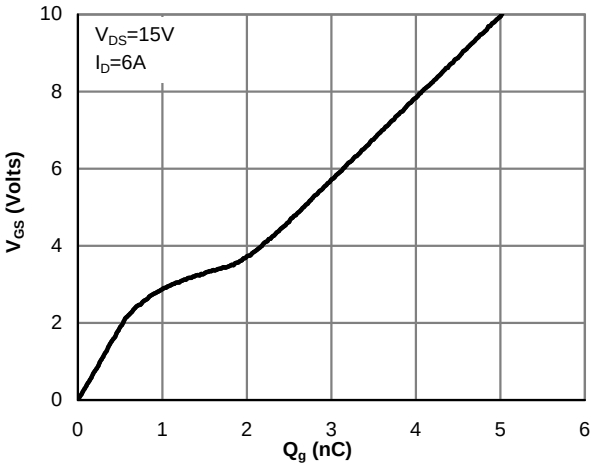

Figure 7: Gate-Charge Characteristics

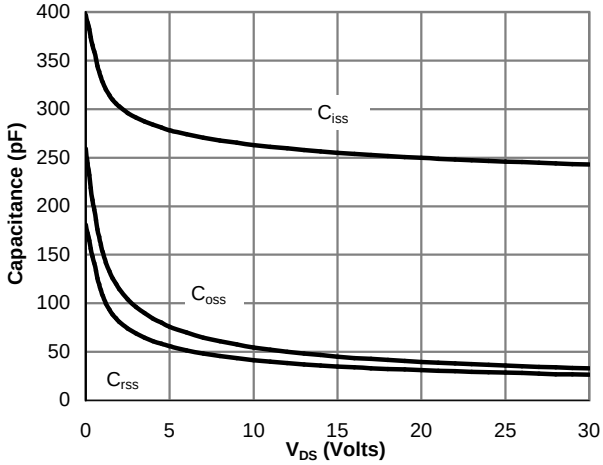

Figure 8: Capacitance Characteristics

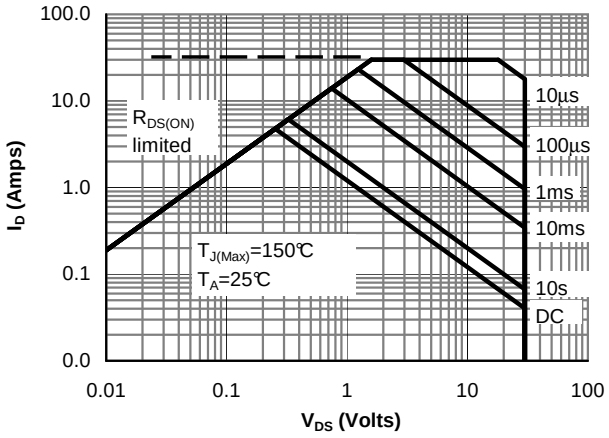

Figure 10: Maximum Forward Biased Safe Operating Area (Note F)

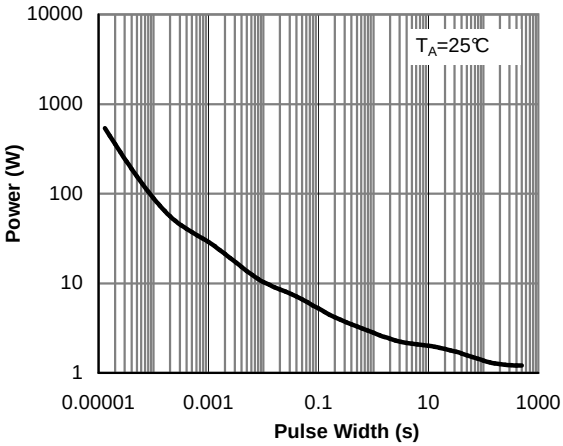

Figure 11: Single Pulse Power Rating Junction-to-Ambient (Note F)

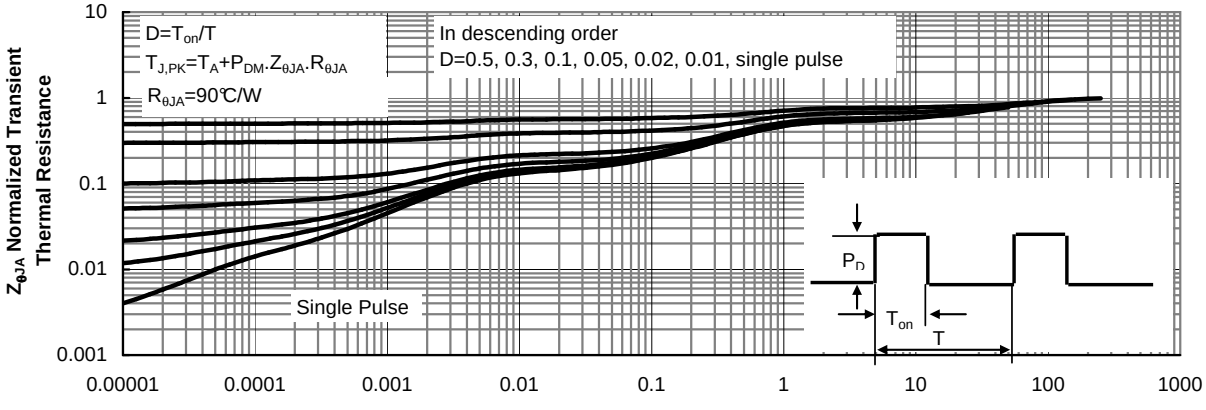

Figure 12: Normalized Maximum Transient Thermal Impedance (Note F)

Gate Charge Test Circuit & Waveform

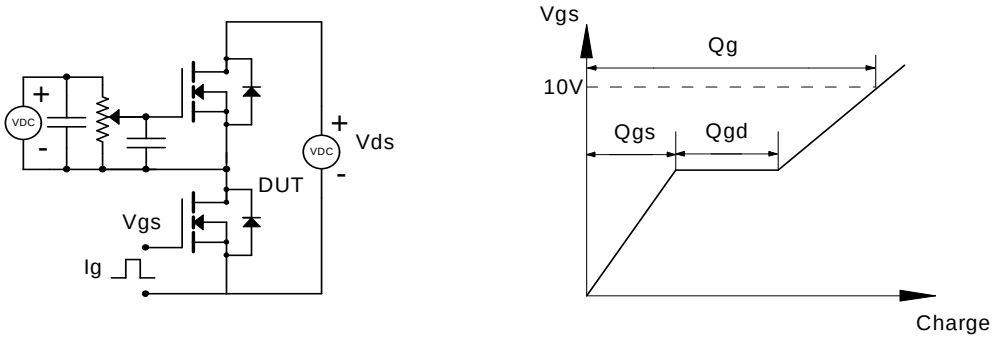

Resistive Switching Test Circuit & Waveforms

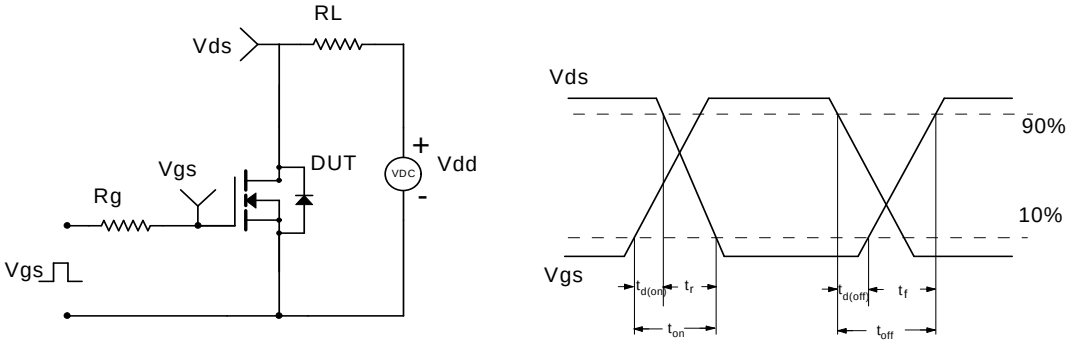

Unclamped Inductive Switching (UIS) Test Circuit & Waveforms

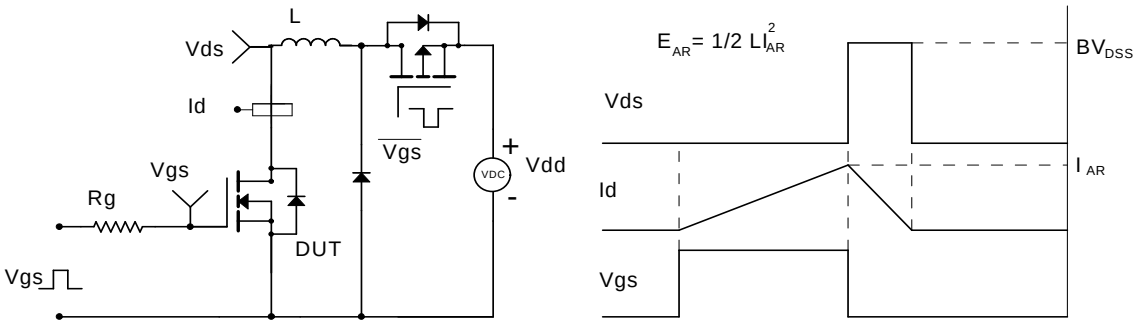

Diode Recovery Test Circuit & Waveforms

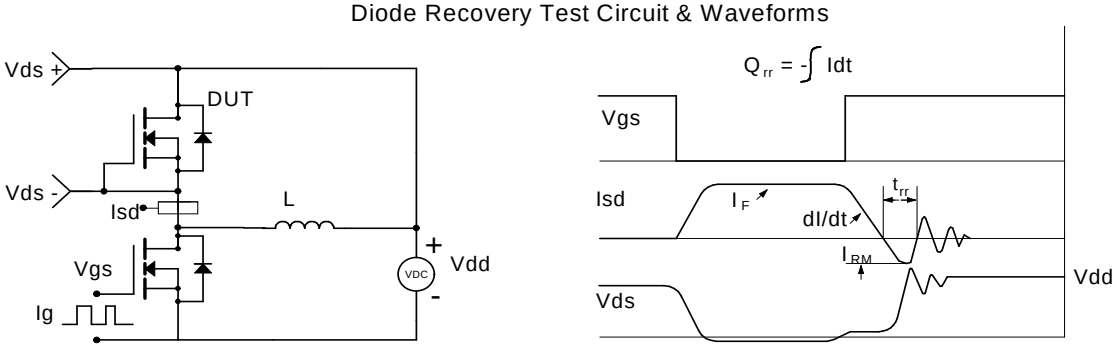

SOP-8(SOIC-8) Package Outline Dimensions

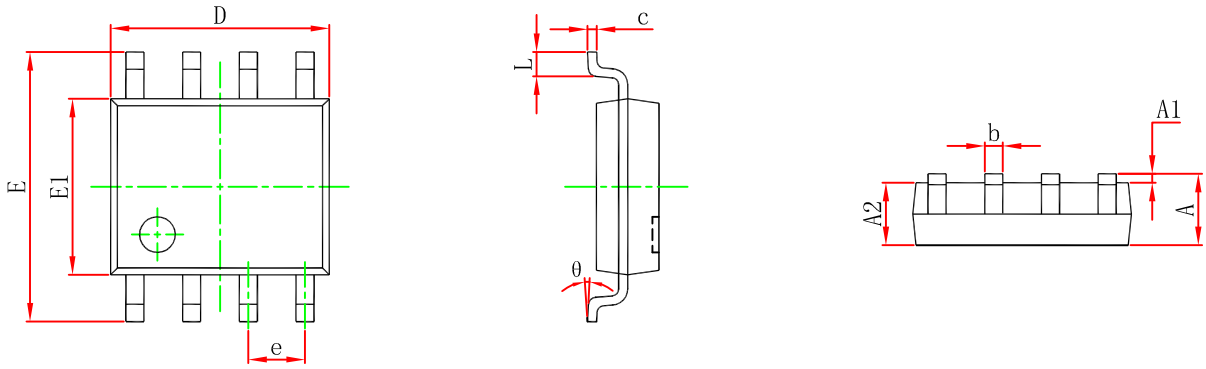

Symbol	Dimensions In Millimeters		Dimensions In Inches	
	Min	**Max**	**Min**	**Max**
A	1.350	1.750	0.053	0.069
A1	0.100	0.250	0.004	0.010
A2	1.350	1.550	0.053	0.061
b	0.330	0.510	0.013	0.020
c	0.170	0.250	0.007	0.010
D	4.800	5.000	0.189	0.197
e	1.270 (BSC)		0.050 (BSC)	
E	5.800	6.200	0.228	0.244
E1	3.800	4.000	0.150	0.157
L	0.400	1.270	0.016	0.050
θ	0°	8°	0°	8°

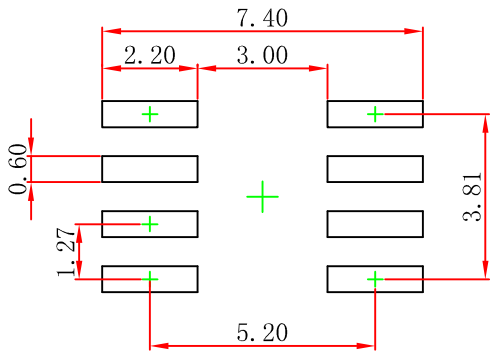

Note:
1.Controlling dimension:in millimeters.
2.General tolerance:± 0.05mm.
3.The pad layout is for reference purposes only.

Attention

■ Any and all HUA XUAN YANG ELECTRONICS products described or contained herein do not have specifications that can handle applications that require extremely high levels of reliability, such as life-support systems, aircraft's control systems, or other applications whose failure can be reasonably expected to result in serious physical and/or material damage. Consult with your HUA XUAN YANG ELECTRONICS representative nearest you before using any HUA XUAN YANG ELECTRONICS products described or contained herein in such applications.

■ HUA XUAN YANG ELECTRONICS assumes no responsibility for equipment failures that result from using products at values that exceed, even momentarily, rated values (such as maximum ratings, operating condition ranges, or other parameters) listed in products specifications of any and all HUA XUAN YANG ELECTRONICS products described or contained herein.

■ Specifications of any and all HUA XUAN YANG ELECTRONICS products described or contained herein stipulate the performance, characteristics, and functions of the described products in the independent state, and are not guarantees of the performance, characteristics, and functions of the described products as mounted in the customer's products or equipment. To verify symptoms and states that cannot be evaluated in an independent device, the customer should always evaluate and test devices mounted in the customer's products or equipment.

■ HUA XUAN YANG ELECTRONICS CO.,LTD. strives to supply high-quality high-reliability products. However, any and all semiconductor products fail with some probability. It is possible that these probabilistic failures could
give rise to accidents or events that could endanger human lives, that could give rise to smoke or fire, or that could cause damage to other property. When designing equipment, adopt safety measures so that these kinds of accidents or events cannot occur. Such measures include but are not limited to protective circuits and error prevention circuits for safe design, redundant design, and structural design.

■ In the event that any or all HUA XUAN YANG ELECTRONICS products(including technical data, services) described or contained herein are controlled under any of applicable local export control laws and regulations, such products must not be exported without obtaining the export license from the authorities concerned in accordance with the above law.

■ No part of this publication may be reproduced or transmitted in any form or by any means, electronic or mechanical, including photocopying and recording, or any information storage or retrieval system, or otherwise, without the prior written permission of HUA XUAN YANG ELECTRONICS CO.,LTD.

■ Information (including circuit diagrams and circuit parameters) herein is for example only ; it is not guaranteed for volume production. HUA XUAN YANG ELECTRONICS believes information herein is accurate and reliable, but no guarantees are made or implied regarding its use or any infringements of intellectual property rights or other rights of third parties.

■ Any and all information described or contained herein are subject to change without notice due to product/technology improvement, etc. When designing equipment, refer to the "Delivery Specification" for the HUA XUAN YANG ELECTRONICS product that you intend to use.