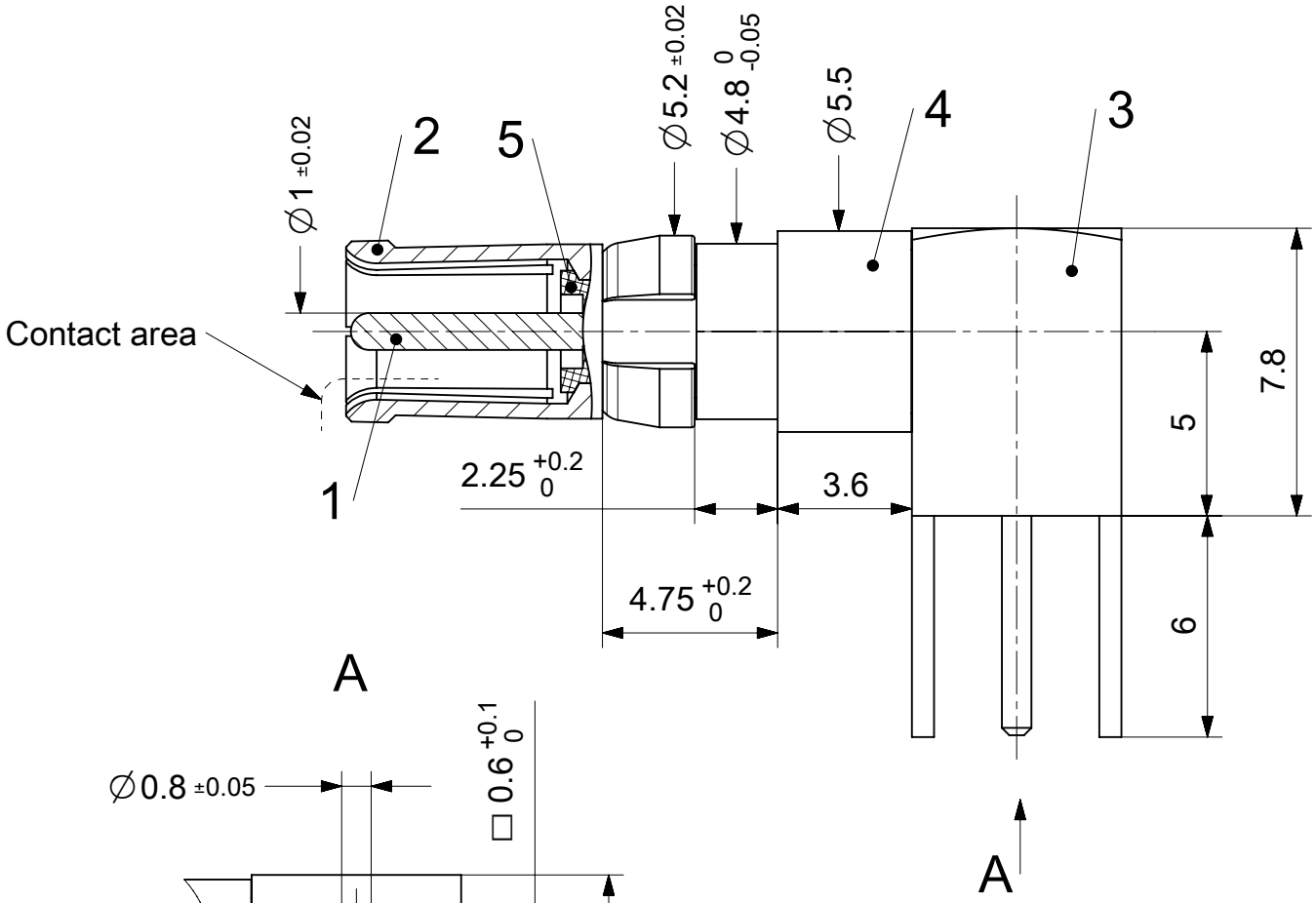

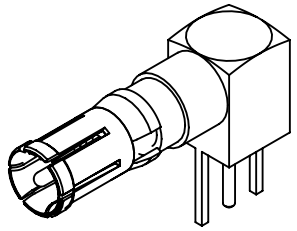

2:1

PCB-Layout

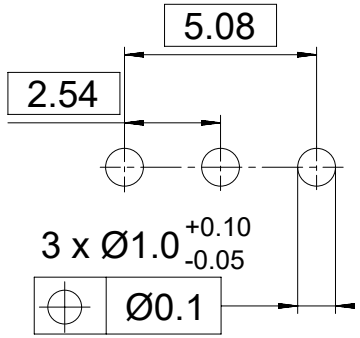

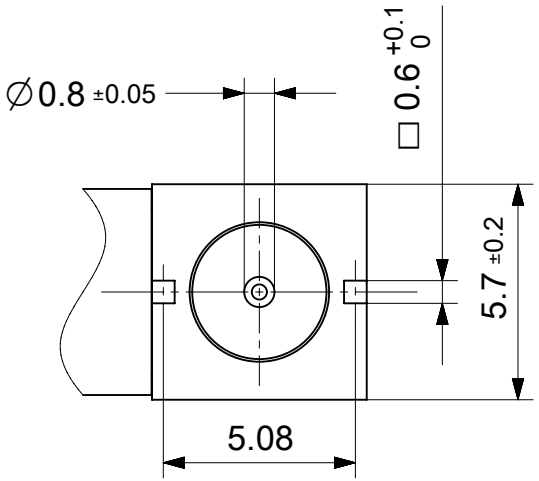

1731121103	FME001S101	101
1731120194	FME001S102	102
1731121075	FME001S202	202
Material Number	FCT Part Number	Material + Finish See extra sheet

RoHS compliant
by exemption

UNLESS OTHERWISE SPECIFIED DIMENSIONS FOR REFERENCE ONLY

REPLACEMENT FOR DOCUMENT NUMBER: FME001S

THIS DRAWING CONTAINS INFORMATION THAT IS PROPRIETARY TO MOLEX ELECTRONIC TECHNOLOGIES, LLC AND SHOULD NOT BE USED WITHOUT WRITTEN PERMISSION

FUNCTIONAL SYMBOLS
FA = 0
FC = 0
FD = 0

DIVISIONAL SYMBOLS

DIMENSION UNITS: mm
SCALE: 5:1

GENERAL TOLERANCES (UNLESS SPECIFIED)

ANGULAR TOL	± °
4 PLACES	±
3 PLACES	±
2 PLACES	±
1 PLACE	±
0 PLACES	±

DRAFT WHERE APPLICABLE MUST REMAIN WITHIN DIMENSIONS

CURRENT REV DESC:

EC NO: 730943
DRWN: VLOKESHA 2021/04/15
CHK'D: MTEUBEL 2022/12/06
APPR: MTEUBEL 2022/12/06

INITIAL REVISION:
DRWN: VLOKESHA 2021/04/15
APPR: MTEUBEL 2022/12/06

molex

FCT 75 OHM COAXIAL CONTACT FOR D-SUB

PRODUCT CUSTOMER DRAWING

DOCUMENT NUMBER	DOC TYPE	DOC PART	REVISION
1731121103	PSD	000	A

FIRST ANGLE PROJECTION | DRAWING: A4-SIZE | SERIES: 173112 | MATERIAL NUMBER: SEE TABLE | CUSTOMER: GENERAL MARKET | SHEET NUMBER: 1 OF 1

DOCUMENT STATUS	P1	RELEASE DATE	2022/12/06 14:05:25

FORMAT: master-tb-prod-A4
REVISION: J
DATE: 2020/01/14