REV.	DESCRIPTION	ECN NO.	NAME	DATE

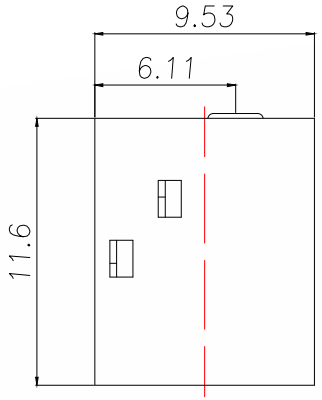

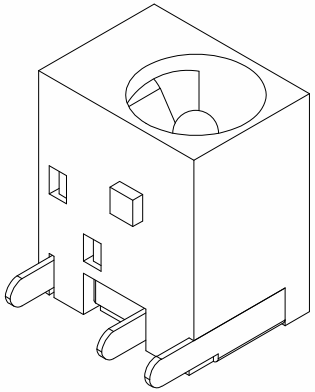

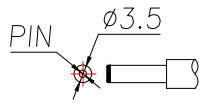

RECOMMEND PULG

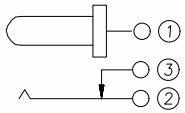

SCHEMATIC

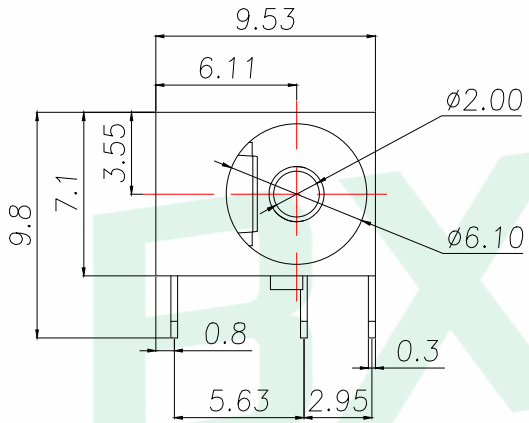

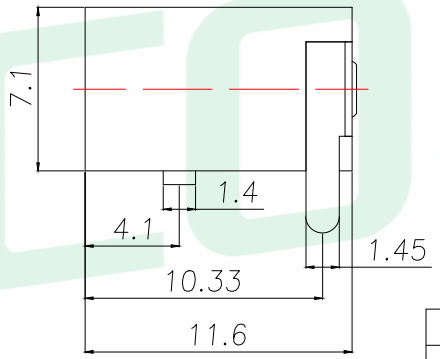

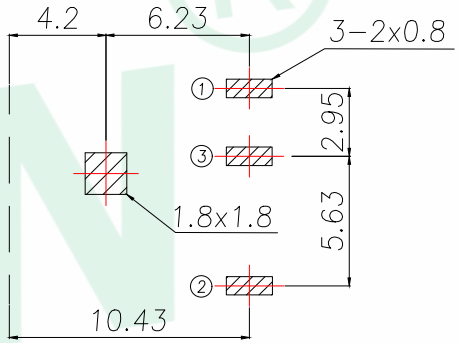

PCB.WELDING DRAWING (TOLERANCE:±0.05)

Main technical performance	
Rated electrical load	DC 24V 2.5A
Contact resistance	≤0.03Ω
Insulation resistance	≥100MΩ DC250V
Pressure resistance	AC 500V 1min
Insertion force	3-30N
Operating temperature range	-20C°~+70C°
service life	5000cycles

LTR	PART NAME	QTY	MATERIAL	REMARK
4	TERMINAL	1	BRASS	MB:CuSn PLATED
3	HOUSING	1	PPA	BLACK
2	TIP SPRING	1	PHOSPHOR BRONZE	MB:CuSn PLATED
1	CENTER PIN	1	BRASS	MB:CuSn PLATED

GENERAL TOLERANCE

DIM.	TOL.
x.x	±0.30
x.xx	±0.25
x.xxx	±0.15
GENERAL ANGLE:	
x.°	±5.0°
x.x°	±1.0°
x.xx°	

DONGGUAN BAOXUN PRECISION TECHNOLOGY CO., LTD

BXCONN®

TITLE: DC SOCKET

DWG. NO.: DC-044-2.0-W

CHECKED: MAX

PART NO.: DC-044-2.0-W

DRAWN: ELLA

UNIT:	SCALE:	SHEET:	DWG. SIZE:	LAYER:
mm	none	1 of 2	A4	bxconn

APPROVED: WILL