380-071
EMI/RFI Non-Environmental Backshell
with Strain Relief
Type G - Rotatable Coupling - Low Profile

380 F S 071 M 16 08 A 6

- Product Series
- Connector Designator
- Angle and Profile
  - A = 90°
  - B = 45°
  - S = Straight
- Basic Part No.
- Finish (Table II)
- Shell Size (Table I)
- Cable Entry (Table X, XI)
- Strain Relief Style (H, A, M, D)
- Length: S only (1/2 inch increments: e.g. 6 = 3 inches)

CONNECTOR DESIGNATORS

A-F-H-L-S

ROTATABLE COUPLING

TYPE G INDIVIDUAL OR OVERALL SHIELD TERMINATION

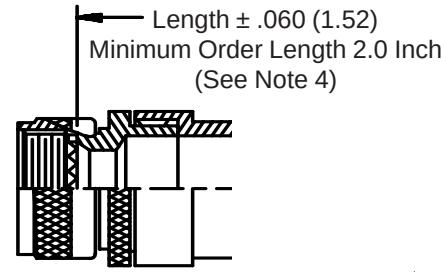

STYLE 2 (STRAIGHT See Note 1)

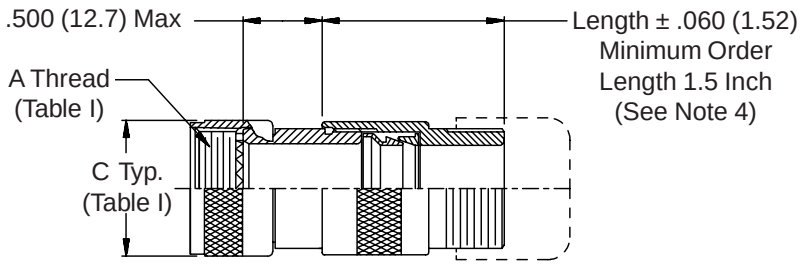

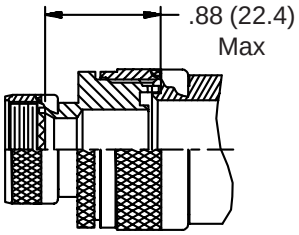

STYLE 2 (45° & 90° See Note 1)

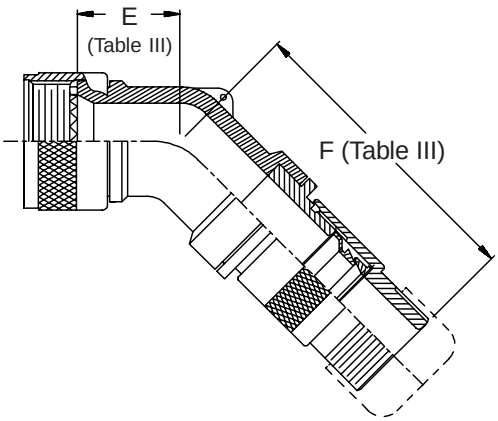

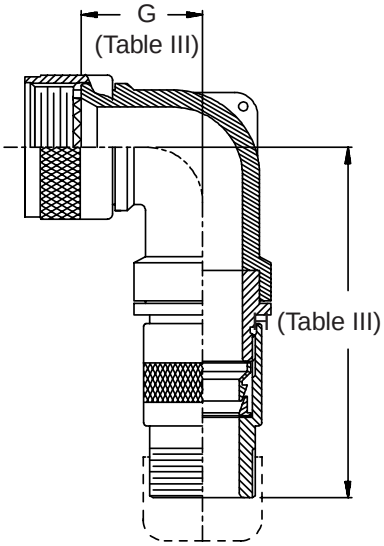

STYLE H
Heavy Duty
(Table X)

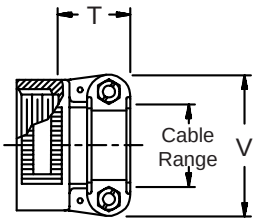

STYLE A
Medium Duty
(Table XI)

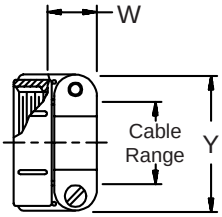

STYLE M
Medium Duty
(Table XI)

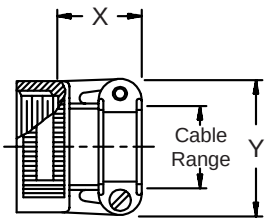

STYLE D
Medium Duty
(Table XI)

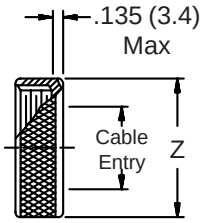

© 2005 Glenair, Inc.

380-071
EMI/RFI Non-Environmental Backshell
with Strain Relief
Type G - Rotatable Coupling - Low Profile

Glenair®

TABLE III: ELBOW DIMENSIONS

Shell Size Conn. Desig. A-F-L-S	H	E Max		F Max		G Max		H Max	
08	09	.457	(11.6)	3.460	(87.9)	.510	(13.0)	3.460	(87.9)
10	11	.520	(13.2)	3.520	(89.4)	.595	(15.1)	3.590	(91.2)
12	13	.582	(14.8)	3.580	(90.9)	.610	(15.5)	3.610	(91.7)
14	15	.645	(16.4)	3.900	(99.1)	.700	(17.8)	3.910	(99.3)
16	17	.738	(18.7)	4.010	(101.9)	.885	(22.5)	4.000	(101.6)
18	19	.926	(23.5)	4.200	(106.7)	.975	(24.8)	4.170	(105.9)
20	21	.926	(23.5)	4.200	(106.7)	.975	(24.8)	4.170	(105.9)
22	23	1.020	(25.9)	4.350	(110.5)	1.125	(28.6)	4.280	(108.7)
24	25	1.020	(25.9)	4.350	(110.5)	1.125	(28.6)	4.280	(108.7)
28		1.145	(29.1)	4.400	(111.8)	1.225	(31.1)	4.450	(113.0)
32		1.207	(30.7)	4.500	(114.3)	1.575	(40.0)	4.700	(119.4)
36		1.238	(31.4)	4.590	(116.6)	1.775	(45.1)	4.700	(119.4)

TABLE II: STANDARD FINISHES

GLENAIR SYMBOL	FINISH
B	Cadmium Plate, Olive Drab
M	Electroless Nickel
NF	Cadmium Plate, Olive Drab Over Electroless Nickel

See Inside Back Cover for Additional Finish Options

See inside back cover fold-out or pages 13 and 14 for unabridged Tables I and II.

TABLE X: CABLE ENTRY

Dash No.	T Max		V Max		Cable Range Min		Cable Range Max	
04	.780	(19.8)	.957	(24.3)	.125	(3.2)	.312	(7.9)
06	.780	(19.8)	1.145	(29.1)	.250	(6.4)	.437	(11.1)
08	.780	(19.8)	1.332	(33.8)	.312	(7.9)	.562	(14.3)
10	.780	(19.8)	1.332	(33.8)	.350	(8.9)	.625	(15.9)
12	.811	(20.6)	1.551	(39.4)	.500	(12.7)	.750	(19.1)
16	.905	(23.0)	1.770	(45.0)	.625	(15.9)	.937	(23.8)
20	1.092	(27.7)	2.113	(53.7)	.875	(22.2)	1.250	(31.8)
24	1.124	(28.5)	2.363	(60.0)	1.000	(25.4)	1.375	(34.9)
28	1.399	(35.5)	2.770	(70.4)	1.250	(31.8)	1.625	(41.3)
32	1.399	(35.5)	3.020	(76.7)	1.437	(36.5)	1.875	(47.6)

1. When maximum cable entry (page 21) is exceeded, Style 2 will be supplied. Dimensions E, F, G and H will not apply. Please consult factory.
2. Metric dimensions (mm) are indicated in parentheses.
3. Cable range is defined as the accommodations range for the wire bundle or cable. Dimensions shown are not intended for inspection criteria.
4. Consult factory for shorter lengths on straight backshells.

TABLE XI: CABLE ENTRY

Dash No.	W Max		X Max		Y Max		Z Max		Cable Range Min **		Cable Range Max	
03*	.437	(11.1)	.760	(19.3)	.843	(21.4)	.630	(16.0)	.156	(4.0)	.250	(6.4)
04*	.437	(11.1)	.760	(19.3)	.906	(23.0)	.755	(19.2)	.188	(4.8)	.312	(7.9)
06*	.500	(12.7)	.760	(19.3)	1.093	(27.8)	.942	(23.9)	.281	(7.1)	.438	(11.1)
08	.563	(14.3)	.760	(19.3)	1.187	(30.1)	1.067	(27.1)	.344	(8.7)	.562	(14.3)
10	.563	(14.3)	.760	(19.3)	1.281	(32.5)	1.192	(30.3)	.375	(9.5)	.625	(15.9)
12	.563	(14.3)	.760	(19.3)	1.500	(38.1)	1.380	(35.1)	.438	(11.1)	.750	(19.1)
16	.656	(16.7)	1.073	(27.3)	1.719	(43.7)	1.535	(39.0)	.562	(14.3)	.938	(23.8)
20	.656	(16.7)	1.323	(33.6)	2.062	(52.4)	1.848	(46.9)	.750	(19.1)	1.250	(31.8)
24	.656	(16.7)	1.323	(33.6)	2.312	(58.7)	2.255	(57.3)	.781	(19.8)	1.375	(34.9)
28	1.188	(30.2)	1.572	(39.9)	2.719	(69.1)	2.505	(63.6)	.969	(24.6)	1.625	(41.3)
32*	1.187	(30.1)	1.572	(39.9)	2.969	(75.4)	2.755	(70.0)	1.125	(28.6)	1.875	(47.6)
40*	1.125	(28.6)	1.572	(39.9)	3.531	(89.7)	3.255	(82.7)	1.469	(37.3)	2.375	(60.3)

* Not available in Style M clamp.

** Not Applicable Style D

© 2005 Glenair, Inc.