REVISIONS					
REV.	ECN NO.	LOCATION	DESCRIPTION	DATE	DESIGN
A0	N/A		INITIAL RELEASE		
A1	N/A		产品图面修正，图面升级整理图面	2024.08.16	阿 树

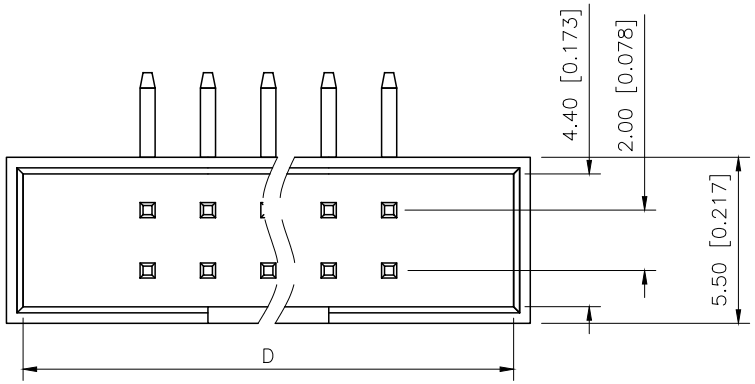

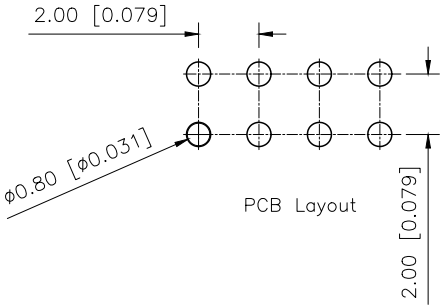

Specifications:
规格：
Voltage rating:250V AC/DC
额定电压：250V AC/DC
Current rating:1.5A AC/DC
额定电流：1.5A AC/DC
Withstanding voltage:450V AC/minute
耐受电压：500V AC/分钟
Temperature range:−45℃~+125℃
温度范围：−45℃~+105℃
Insulation resistance:1000MΩ min
绝缘电阻：1000MΩ Min
Contact resistance:20mΩ Max
接触电阻：20mΩ Max

Poles	Dimensions	
	A	B
06	13.34	4.00
08	15.34	6.00
10	17.34	8.00
12	19.34	10.00
14	21.34	12.00
16	23.34	14.00
18	25.34	16.00
20	27.34	18.00
22	29.34	20.00
24	31.34	22.00
26	33.34	24.00
28	35.34	26.00
30	37.34	28.00
32	39.34	30.00
34	41.34	32.00
36	43.34	34.00
40	47.34	38.00
42	49.34	40.00
44	51.34	42.00
50	57.34	48.00
60	67.34	58.00
64	71.34	62.00
68	75.34	66.00

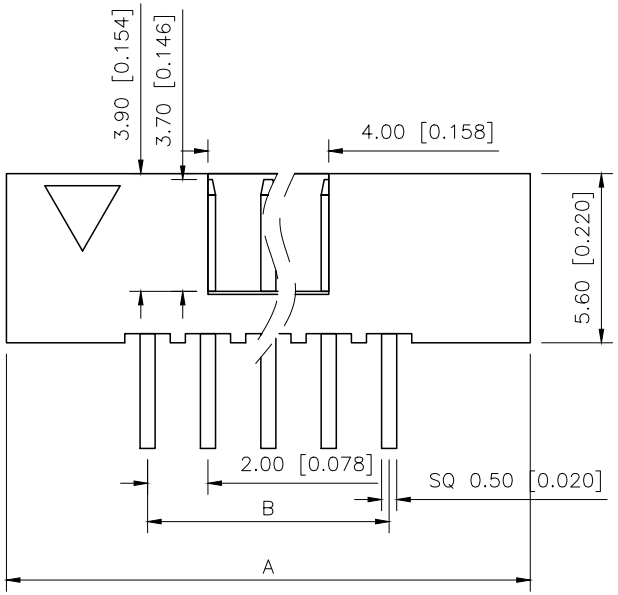

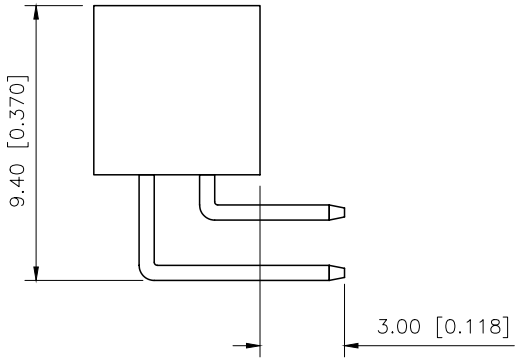

PART NO.:
X2001 W R−2x15 A−6T V01
① ② ③ ④ ⑤ ⑥ ⑦

① Series No
② Category:W−Wafer
③ Welding Board Angle:R−Stright 90°
④ Row No.Pin No:2xXX−2x03−2x32P
⑤ Category:A−No gap
⑥ Material:6T−Nylon 6T UL94V−0
⑦ Plating:V01−Gold Flash

PART NO	Material	Material(Pin)	Suitable XKB IDC
X2001WR−2x15A−6TV01	Nylon 6T	Brass	X2001HA−2xXX X2001HA2−2xXX

ANGLAR	±5°
X.	±0.40
X.x	±0.30
X.xx	±0.20
X.xxx	±0.15
UNSPECIFIED TOLERANCES	

XKB INDUSTRIAL PRECISION CO.,LIMITED

DESIGN	阿 树	VIEW:	MODEL TYPE: 2.0mm Jane cattle 简牛
CHECKED		UNIT: mm/in	PART NO.: X2001WR−2x15A−6TV01
APPROVED		SIZE: A4	DWG NO.: X−X2001WR−2x15A−6TV01

SCALE	PAGE	REVISION
N/A	1/1	A1