REV.	DESCRIPTION	ECN NO.	NAME	DATE

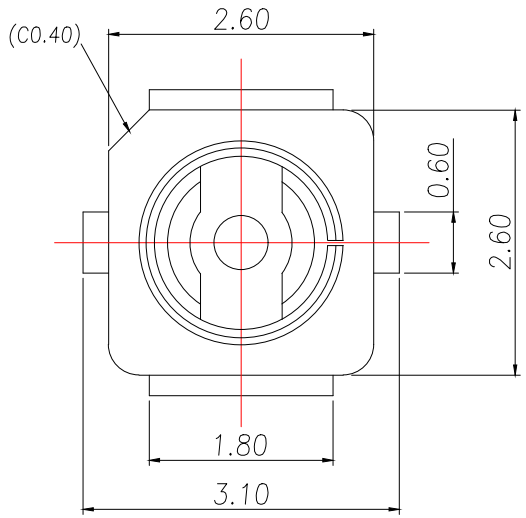

NOTE:1

1. ELECTRICAL CHARACTRRISTICS:
   1.1 CURRENT RATING: 0.5A MAX.
   1.2 IMPEDANCE:50OHM NOMINAL.
2. MECHANICAL CHARACTERISTICS:
   2.1 OPERATING TEMP. −40°~90°
   2.2 VEWR UP TO 3GHz:1.3MAX.
   3GHz TO 6GHz:1.4MAX.
   2.3 DURABILITY:30CYCLES

NOTE:2

1.HOUSING MATERIAL: LCP, NATURE, UL94V−0.

2.TERMINAL MATERIAL: COPPER ALLOY (C2680),

3.SHELL MATERIAL: COPPER ALLOY (C5191),

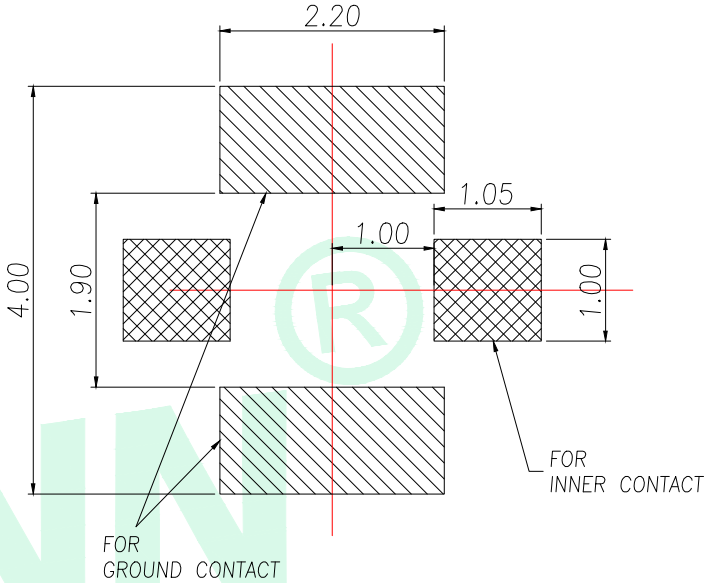

RECOMMENDED PCB LAYOUT
GENERAL TOLERANCE ±0.05

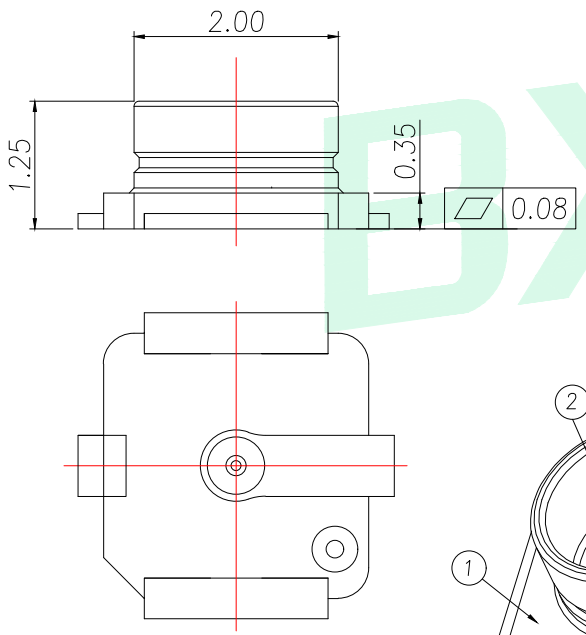

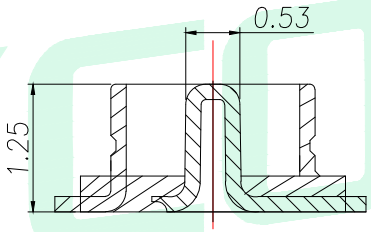

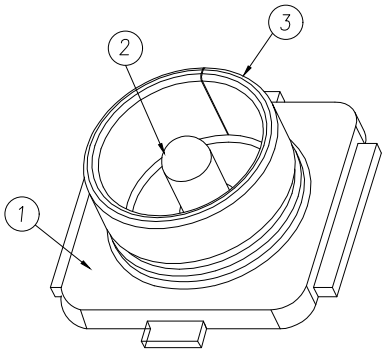

ITEM	DESCRIPTION	Q'TY	MATERIAL	FINISH	REMARK
3	GROUND CONTACT	1	COPPER ALLOY	Au 1u" PLATING OVER NI 50u" OVER ALL	
2	INNER CONTACT	1	COPPER ALLOY	Au 1u" PLATING OVER NI 50u" OVER ALL	
1	HOUSING	1	LCP UL94V−0		WHITE

GENERAL TOLERANCE

DIM.	TOL.
.x	±0.25
.xx	±0.25

GENERAL ANGLE:	
.x°	±5°
.xx°	±3°
.xxx°	±1°

DONGGUAN BAOXUN PRECISION TECHNOLOGY CO., LTD

BXCONN®

TITLE: RF BOARD END CONNECTOR,FIRST GENERATION

DWG. NO.: BX−IPEX−001

CHECKED: MAX

PART NO.: BX−IPEX−001

DRAWN: ELLA

UNIT:	SCALE:	SHEET:	DWG. SIZE:	LAYER:
mm	none	1of 1	A4	bxconn

APPROVED: WILL