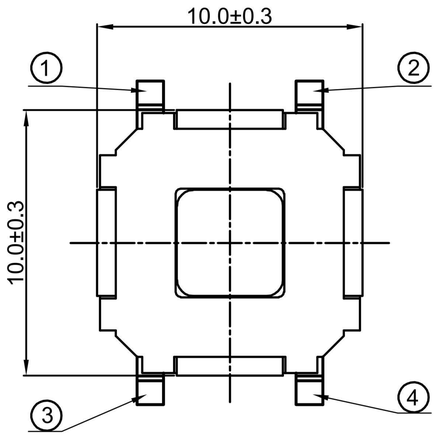

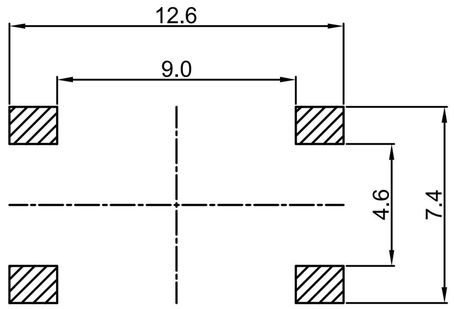

RECOMMENDED PCB LAYOUT

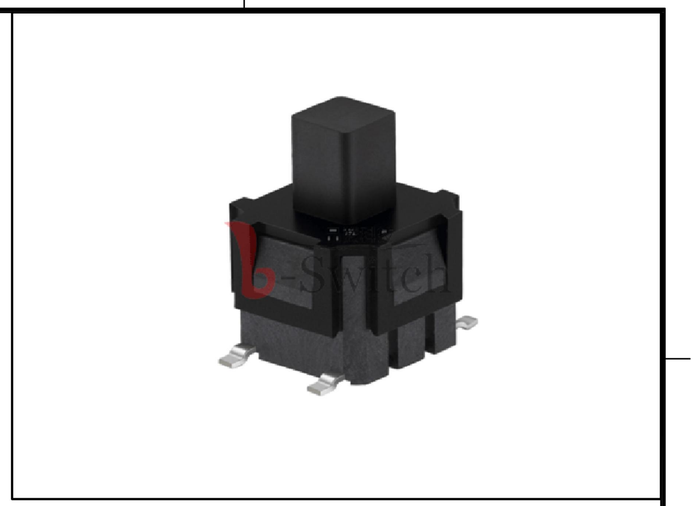

PS-10 49 S V D- 4P N

PUSH SWITCH

Switch Type
10=10.0×10.0mm

Switch Height
49=4.9mm

Foot Type
S=SMT

Type
V=Vertical

Operating Force
D=500gf

Foot Position
4P=4pin

Switch Function
N=No Lock

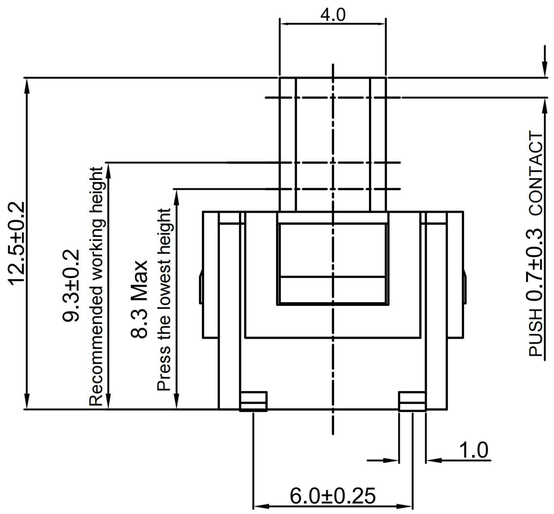

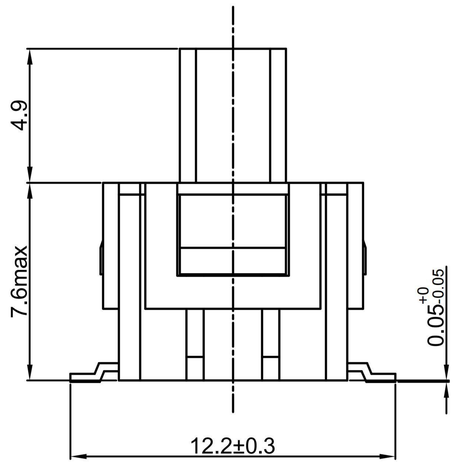

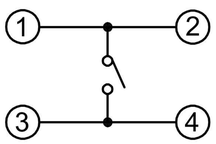

CIRCUIT DIAGRAM

G-Switch Specification:

1.Operating temperature range: -40°C ~ +85°C
2.Rating: 50mA.24V DC
3.Insulation resistance: 100MΩ min.100V DC
4.Dielectric strength: 250V AC for 1 min
5.Contact resistance:100m Ω max.
6.Travel: 0.7±0.3mm
7.Switch lifetime:10,000Cycles

Pb Process Capable | RoHS Compliant EU RoHS Standards | HALOGEN Compliant Halogen Free

SCALE: 1:1	UNIT: mm	Title: Vertical Tact Switch SMT 10.0×10.0×4.9mm				品赞科技 b-Switch ®
SIZE: A4						
Unless otherwise General Tolerance: X. ±0.30, X.x ±0.20, X.xx ±0.15, X.xxx ±0.10, Angles ±3°		Molde Code: PS-1049SVD-4PN				
		DRAWN	CHECKED	APPROVED	DATE	
		Xia	Chen	Chen	2023.02.01	REV: A0 / SHEET: 1/1