样品承认书

客户代码：			
物料名称：	贴片钟振		
规格型号：	SMD5032 6pin 156.250MHz 3.3V ±30PPM总频差 -40~85℃ LVDS		
P N/ SJK：	7N156250G33DC		
环保属性：	■RoHS ■REACH ■HF □PAHS □其它		
版 次：	A1 2025-7-2 9 初版	最小包装： 1000pcs/real	
湿敏等级：	一级		

承 认 签 章					
供 应 商 承 认			（ ）公 司 承		
制定	审 核	核 准	工 程 师	审 核	批 准
贺丹斌	李相同	刘惠光			
SJK 支持			盖章签署		
FAE_EMAIL			日 期		
日 期			批示： □接受 □有条件接受		
备注:					

ELECTRICAL SPECIFICATIONS

Parmeters	Condition\Model	7N
Fan Out Type		LVDS
Supply Voltage		3.3V±10%
Frequency		156.250MHz
Operating Temperature		-40℃ to +85℃
Current		60mA Max
Frequency Stability	All Conditions	±30ppm
Output Voltage	Vol(Min)	0.9V
	VoH(Max)	1.6V
Rise/Fall Time	20%~80%	0.5ns Max
Duty Cycle		50±10%
Storge Temperature		-55~+125℃
Start-upTime		10ms Max
Aging		±3ppm (first year at 25℃)
Jitter(12kHz to 20MHz)		0.2ps
Input Voltage	VIH	0.7*Vcc V Min
	VIL	0.3*Vcc V Max

DIMENSION（Unit：mm）

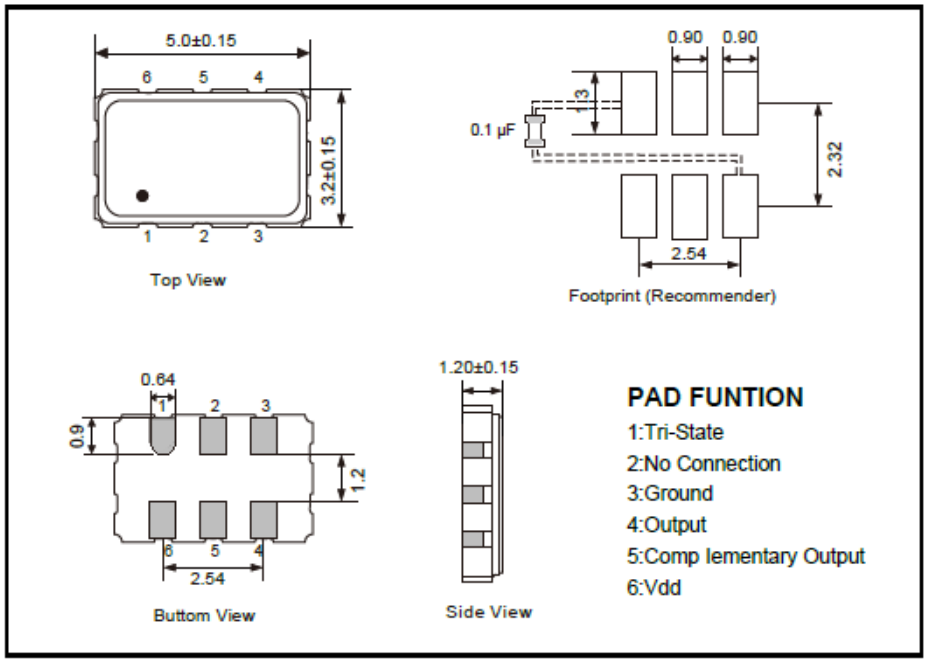

MARK

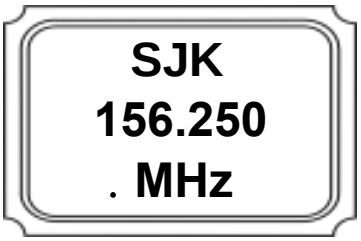

MEASUREMENT CIRCUIT

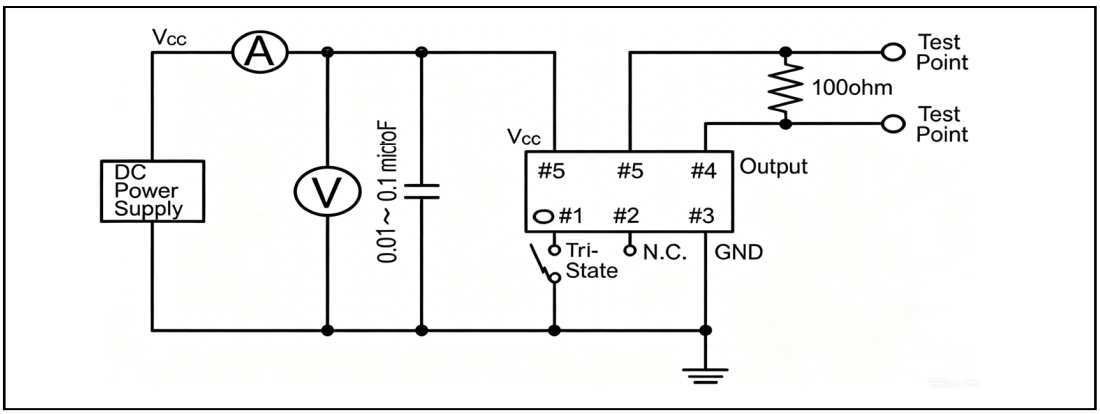

WAVEFORM CONDITIONS

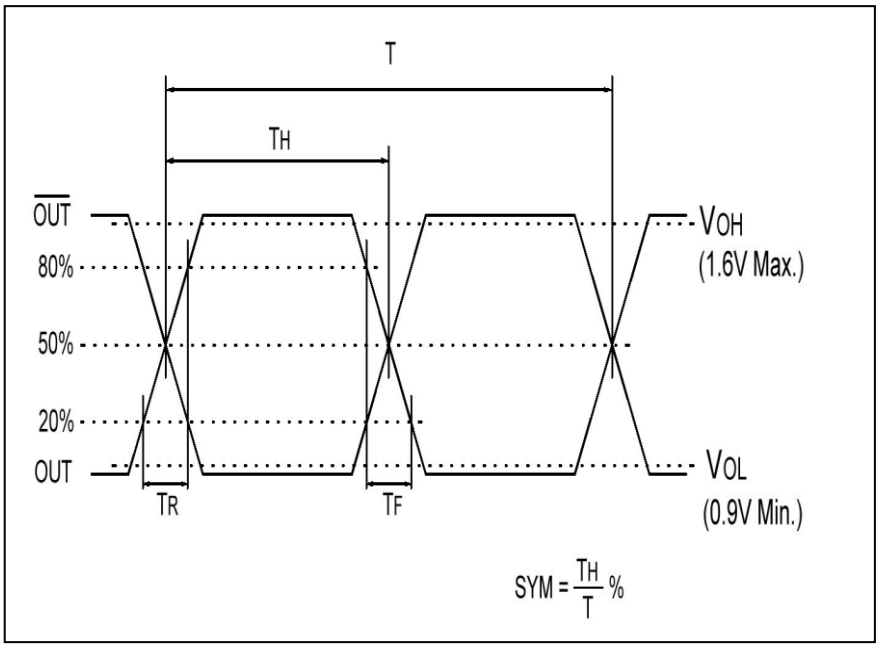

REFLOW CONDITION

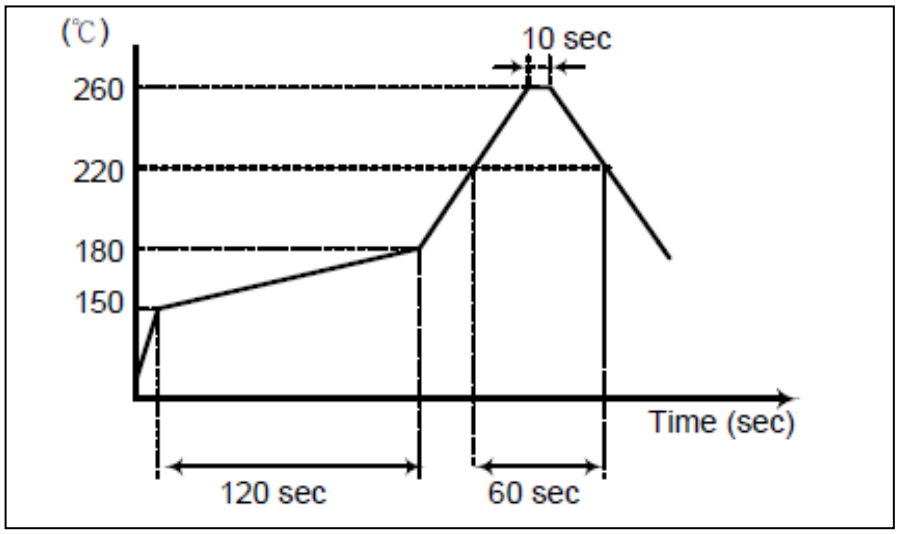

The reflow temperature profile may vary depending on the product model, specifications and frequency range.Refer to the individual product specifications for details

CARRIER TYPE

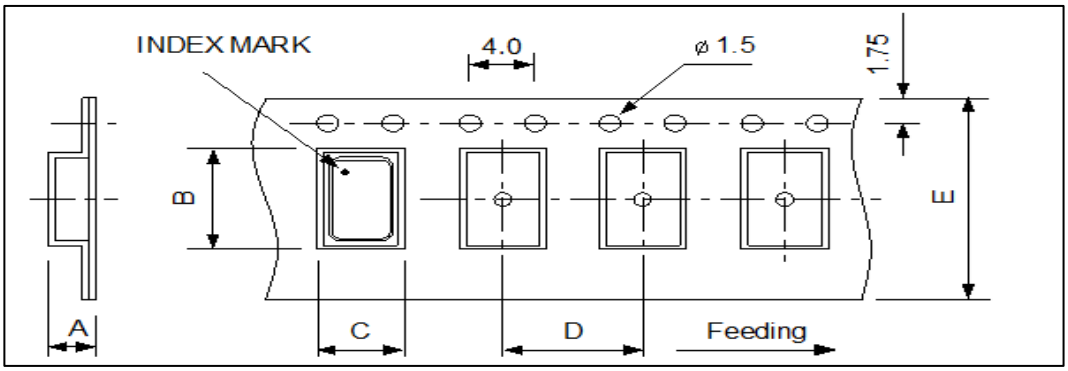

REEL

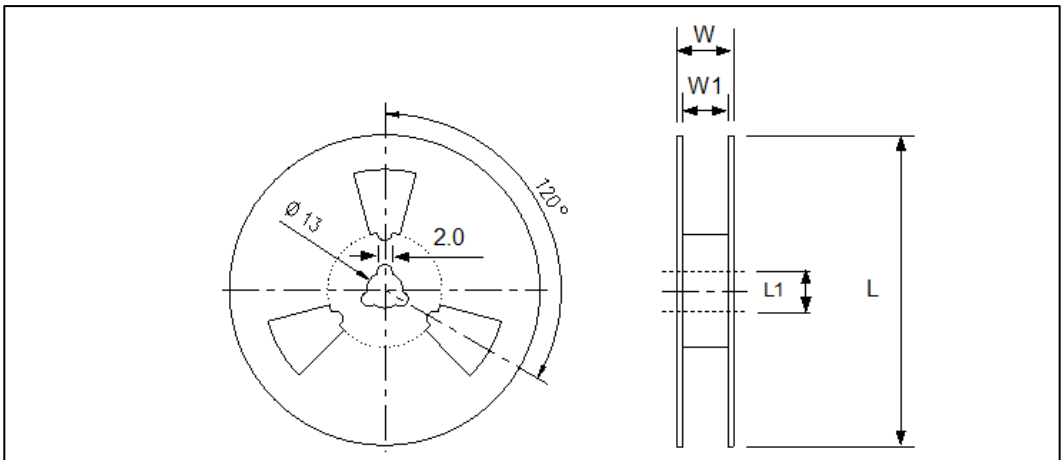

		A	B	C	D	E	L	L1	W	W1	pcs / Reel
DIMENSIONS	7050	2.15	7.9	5.4	8	16	180	13	21.5	17.5	1K
	6035	1.4	6.4	3.9	8	12	180	13	15.4	13	1K
	5032	1.46	5.5	3.6	8	12	180	13	15.4	13	1K
	3225	1.4	3.4	2.7	4	8	180	13	11.5	8	3K
	2520	1.15	2.8	2.25	4	8	180	13	10.5	8	3K
	2016	0.95	2.25	2.25	4	8	180	13	10.5	9	3K
	1612	0.8	2.0	1.85	4	8	180	13	10.5	9	3K

RELIABILITY TEST SPECIFICA TIONS

Test item	Equipment	Condition	Specification
1.SOLDERABILITY TEST	SJK-REL001、RC-328A	TP:260℃ TsMax：200℃ TsMin：150℃ 2 time 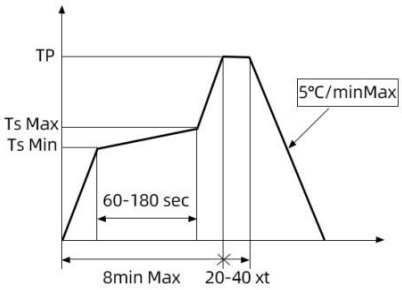	MIL-STD-883E Method 2003.7
2. HERMETICITY TEST	HELIOT-306S	Pressurized 0.4~0.5Mpa ethanol sealed tank for 10 minutes	MIL-STD-883E Method 1014.10
3. VIBRATION TEST	HG-V4、S&A 250B	Enable Crystal(10g) from 10-55-10Hz,X、Y、Z horizontal,1 Minute vibration/time, 1time/ 2 hours.	MIL-STD-883E Method 2007.3
4. MECHANICAL SHOCK	HPC-200、S&A 250B	Enable Crystal 50G(490m/s2) time=11 ms speed=3.4 m/s half sine wave oscillation	JIS C6701
5. DROP TEST	HARD BOARD.S&A250B	75cm High,3 times on hard board	MIL-STD-202F Method 213B
6. HIGH&LOW TEMP STORAGE TEST(Static test)	H-PTH-80CK & HM101-3ABN，S&A 350B/250B	High temperature: 125℃±2 ℃,1000hr；Low temperature:-40℃ ±3℃,1000hrs	MIL-STD883C, METHOD 1011.8
7. TEMP &HUM CYCLING TEST	H-PTH-80CK CHAMBE，S&A 350B/250B	Temperature:-10℃±2 ℃～65℃±2 ℃,Humidity:93±3%,1 cycle need 24 hrs. 5cycles.	MIL-STD-883E Method 1005.8
8. HIGH TEM. & HUM.STORAGE TEST	H-PTH-80CK CHAMBE，S&A350B/250B	Temperature:85℃±2，Humidity:85+3,-2%,Store 96 hrs	JIS C6701
9. AGING TEST	H-PTH-80CK CHAMBE，S&A350B/250	Temperature:85℃±2，Store 1000 hrs	JIS C5023