修订 REV	标记 MARK	修改摘要 REVISION DESCRIPTION	签名 SIGNATURE	日期 DATE
A0		NEW DWG		2016-03-12

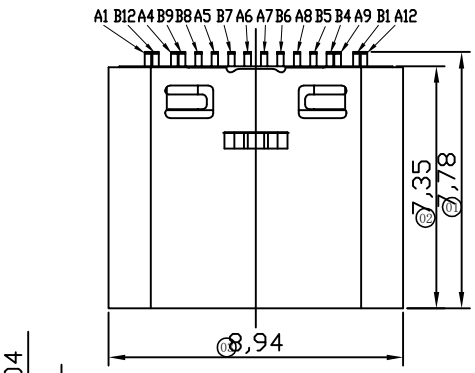

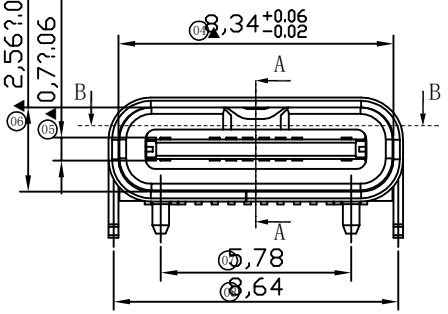

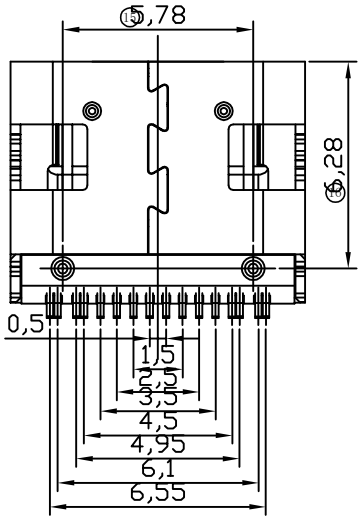

SECTION A-A
SCALE 1:1

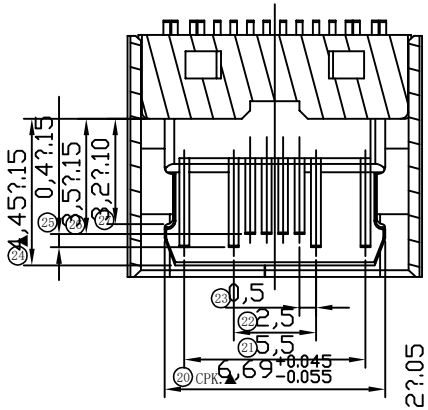

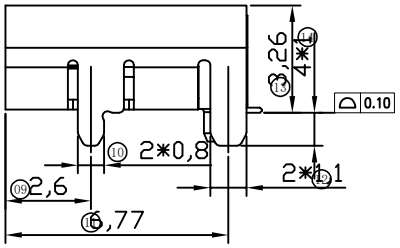

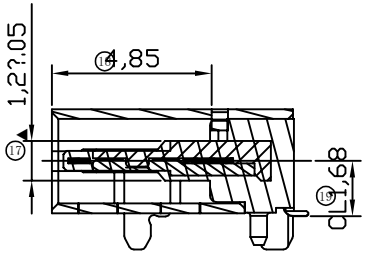

SECTION B-B
SCALE 1:1

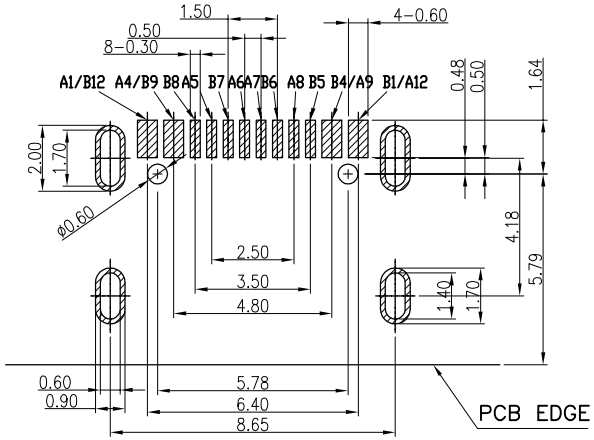

RECOMMEND P.C.B LAYOUT(COMPONENT SIDE)
TOLERANCE FOR PCB LAYOUT I.0 ± 0.05

NOTES:
1.MATERIAL:
MOLDING: LCP UL94 V-0
CONTACT:COPPER ALLOY.
GOLD PLATED Min ON CONTACT AREA,100u''
Min TIN (LEAD FREE) ON SOLDER AREA,
SHELL: SUS304-H,T=0.30±0.03mm
50u" NICKEL PLATING OVER ALL.
SHILD:SUS301-H,T=0.15±0.03mm
2.MECHANICAL:
INSERTION: 5~20N.
EXTRACTION: 8~20N AFTER TEST.
DURABILITY: 10000 CYCLES
3.ELECTRICAL:
CURRENT: 5A FOR VBUS;
1.25A FOR GND PIN.
0.25A FOR OTHER.
VOLTAGE: 20 V MAX
WITHSTANDING VOLTAGE: 100V AC R.M.S.
CONTACT RESISTANCE: 40mΩ MAX.
INSULATION RESISTANCE: 100MΩ MIN.
4.ENVIRONMENTAL
TEMPERATURE RANGE -25°C ~ +85°C

PIN	SIGNAL NAME	PIN	SIGNAL NAME
A1	GND	B12	GND
A4	VBUS	B9	VBUS
A5	CC1	B8	SBU2
A6	DP1	B7	DN2
A7	DN1	B6	DP2
A8	SBU1	B5	CC2
A9	VBUS	B4	VBUS
A12	GND	B1	GND

深圳市华德共创科技有限公司
Shenzhen Huade co-create Technology Co.,LTD
电话：0755-27111216 传真：0755-29940187

-TOLERANCES- UNLESS OTHERWISE SPECIFIED 公差参数表				TITLE: 产品名称:	USB C母座16P SMT不锈钢镀镍 L=7.35		
X.X	±0.30	X.X°	±3°	APPD: 核准:	PART NO: 产品编号:	TYPE C-GD-123PWB	
X.XX	±0.20	X.XX°	±2°	CHECK: 校对: 王建业	DATE	SCALE	UNIT	CODE NUMBER
X.XXX	±0.10	X.XXX°	±1°	DRAW: 绘图: 黄艳兰	2016-03-12	1:1	mm	A001