修订 REV	标记 MARK	修改摘要 REVISION DESCRIPTION	签名 SIGNATURE	日期 DATE
A0		NEW DWG		2016-03-12

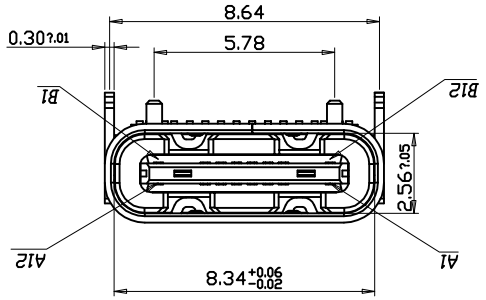

SPECIFICATIONS:

1. ELECTRICAL CHARACTERISTICS:
   - 1-1. CONTACT RESISTANCE: 30mΩ MAX.
   - 1-2. DIELECTRIC WITHSTANDING VOLTAGE: 100V AC FOR ONE MINUTE.
   - 1-3. INSULATION RESISTANCE: 100MΩ MIN. MEASURED BY 500 VDC
2. MECHANICAL CHARACTERISTICS:
   - 2-1. INSERTION FORCE :0.5-2.0Kgf(REF.)
   - 2-2. WITHDRAWAL FORCE :0.8-2.0Kgf(REF.)
3. LIFE TEST: 10,000 CYCLES.
4. TO CONFORM TO THE KRCONN HAZARDOUS SUBSTANCE FREE SPEC.

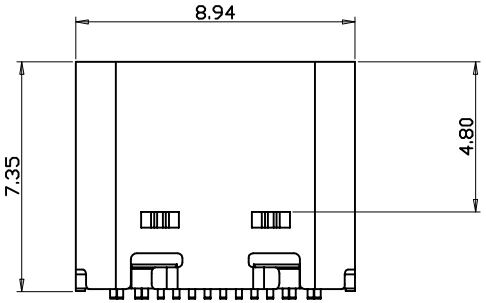

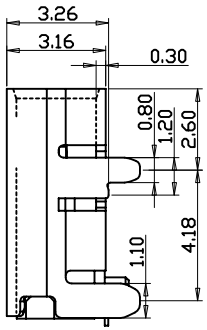

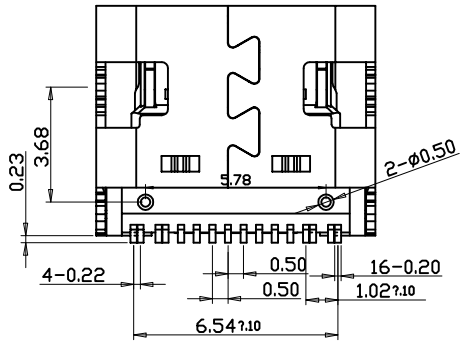

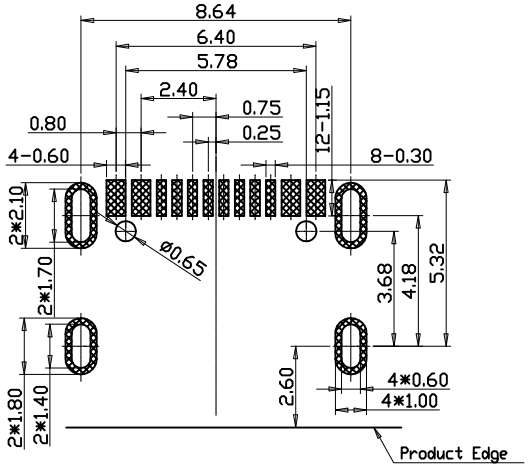

RECOMMENDED P.C.B. LAYOUT (T:1.00mm)

TOLERANCE UNSPECIFIED ±0.05mm

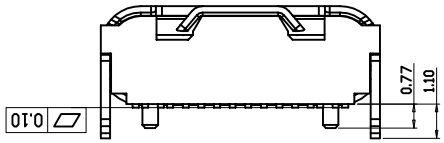

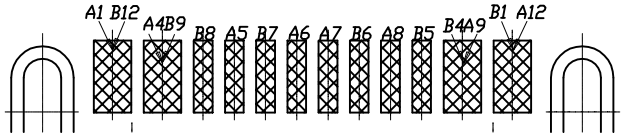

A1	GND	B12	GND
A4	VBUS	B9	VBUS
A5	CC1	B8	SBU2
A6	DP1	B7	DN2
A7	DN1	B6	DP2
A8	SBU1	B5	CC2
A9	VBUS	B4	VBUS
A12	GND	B1	GND
PIN	SIGNAL NAME	PIN	SIGNAL NAME

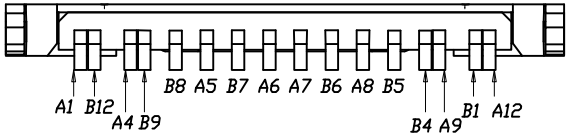

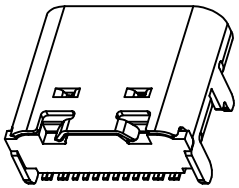

NO.	DESCRIPTION	MATERIAL	REMARKS	QTY
6	SHELL	STAINLESS STEEL	NI Plated	1PCS
5	SHIELDING PLATE	STAINLESS STEEL	---	1PCS
4	MD	HIGH TEMPERATURE PLASTIC		1PCS
3	CONTACT	COPPER ALLOY	Au/NI Plated	1SET
2	CONTACT	COPPER ALLOY	Au/NI Plated	1SET
1	HOUSING	HIGH TEMPERATURE PLASTIC		1PCS

深圳市华德共创科技有限公司
Shenzhen Huade co-create Technology Co.,LTD
电话：0755-27111216 传真：0755-29940187

-TOLERANCES- UNLESS OTHERWISE SPECIFIED 公差参数表					TITLE: 产品名称:	TYPE C 16PIN卧式带钢片本色		
X.X	±0.30	X.X°	±3°	APPD: 核准:	PART NO: 产品编号:	TYPE C-ZL-102PWB		
X.XX	±0.20	X.XX°	±2°	CHECK: 校对: 王建业	DATE	SCALE	UNIT	CODE NUMBER
X.XXX	±0.10	X.XXX°	±1°	DRAW: 绘图: 黄艳兰	2016-03-12	1:1	mm	A001

由 Autodesk 教育版产品制作