KNSCHA
Empowering The World

广东科尼盛电子科技有限公司
KNSCHA ELECTRONICS CO., LIMITED

规格承认书
Specification For Approval

客户名称: (Customer Name)	
产品名称: (Product Name)	电解电容 Aluminum Electrolytic Capacitor
客户料号: (Customer part number)	
科尼盛料号: (KNSCHA number)	LSR400M337S252S1AA
型号规格: (Specifications)	E/C 400V/330μF 30*25mm 105℃ KNSCHA KSR 3000H P:10mm ±20% 咖啡银字
日期: DATE	2025.9.3

制 造 Manufacture	
核 准 APPROVAL	制 作 PREPARED
王师	张优美

工程课

客户承认栏 CUSTOMER APPROVED		
核 准 APPROVED	确 认 CHECKED	经 办 DESIGNED

广东科尼盛电子科技有限公司

KNSCHA ELECTRONICS CO.,LIMITED.

No. 8th floor, A3 building, R&D center (Phase I),

Songshan Lake Intelligent Valley, Liaobu Town, Dongguan City.

TEL:0769-83698067 81035570 FAX: 0769-83861559

Email: sales@knscha.com Website: http://www.knscha.com

一、部品规格特征表

NO	Series	CAP (μF)	WV (V.DC)	Size (mm)	CAP %	Operating Temperature Range (℃)	DF%(120Hz 25℃)	LC (3min) (uA)	Max Ripple Curent(A@105℃)/120HZ	ESR(Ω,MAX 25℃ /100KHZ)	寿命（H）
1	KSR	330	400	30*25	±20	-25～105	15	1090	2.15	0.98	3000
注：无卤产品											
2											
3											
4											

1. 适用标准(TEST STANDARD)：

JIS C 5141 - 1991 电子机器用固定非固体电解质电解电容器

JIS C 5102 电子机器用固定电容器试验方法

GB 5993-91 电子设备用固定电容器 第四部分：分规范：固体和非固体电解质铝电容器

2. 适用范围（Adapt Range）：

本产品规格书适用于广东科尼盛电子科技有限公司铝电解电容器。

This product specification is adapted to Aluminum Electrolytic Capacitors produced by KNSCHA ELECTRONICS CO.,LIMITED.

3. 使用温度范围(Operating Temperature Range):

-25～+105℃

4. 浪涌电压(Surge Voltage):

工作电压（V） Rated voltage	6.3	10	16	25	35	50	63	100	160	200	250	350	400	450	500
浪涌电压（V） Surge voltage	8	13	20	32	44	63	79	125	200	250	300	400	450	500	550

5. 损耗(Dissipation Factor): (25℃,120Hz)

工作电压（V） Rated voltage	16	25	35	50	63	100	160	200	250	350	400	450	500
损耗角正切值 D.F.(Tan%) Max	50	40	35	30	20	20	15	15	15	15	15	20	20

注：当标准容量每大于1000μF时，每增加1000μF损失角正切值相应增加2%。

6. 漏电流(DC Leakage Current）

施加额定电压3分钟后测试 (After3 minutes application of rated working voltage)

I≤3√CV(μA），（at 25℃)

7. 胶管标识示意图(Marking):

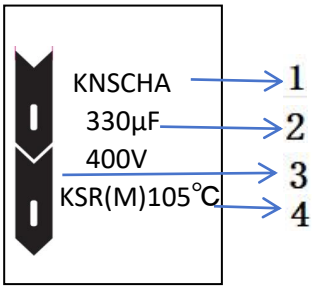

NO. 代表内容 Item

1 科尼盛公司商标(Logo)

2 电容器规格（额定电压和容量）Capacitance and Rated Vlotage

3 负极表示带 Polarity bar

4 工作最高温度与容量范围(Operating Temperature Range and Capacitance Tolerance)

8. 外形图（Dimensions）：

单位：mm

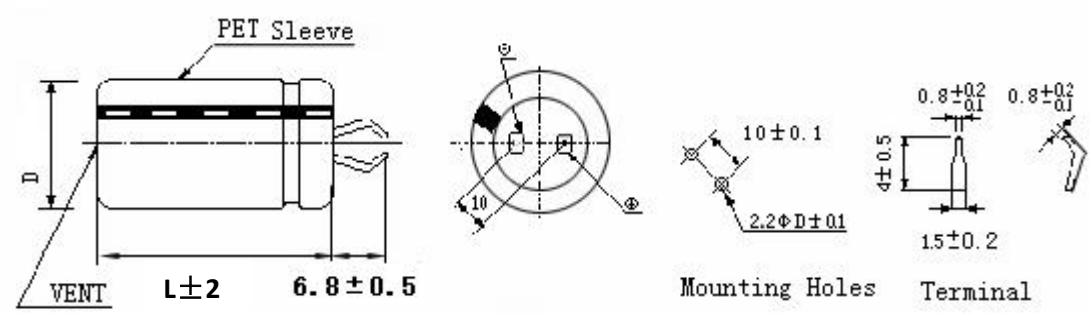

ΦD±0.5	**30.0**
F±0.5	**10.0**
L±2	25

注：牛角

9. 纹波电流系数（Multiplier for ripple current）：

频率系数 Frequency Coefficents

CAP(μF)Frequency(HZ)	50(60)	120	300	1K	10K	100K
10～50WV	0.95	1	1.03	1.05	1.08	1.08
63～100WV	0.93	1	1.07	1.13	1.19	1.20
160～250WV	0.81	1	1.17	1.32	1.45	1.50
350～450WV	0.77	1	1.16	1.30	1.41	1.43

温度系数 temperature coefficients

Temperature(°C)	≤50	65	75	85	95	105
Multiplier	1.9	1.75	1.57	1.4	1.2	1.0

10. 构造图及材料表（Frame drawing and Material list):

10.1、构造图(Frame drawing)

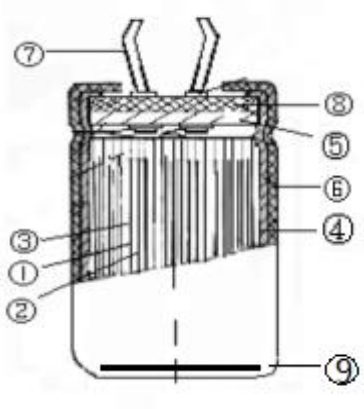

10.2、材料表（Material table)

NO.	构成部件 Component	材质 Material	备注 Remarks
1	正极箔 Al Foil(+)	铝 Aluminum	
2	负极箔 Al Foil(-)	铝 Aluminum	
3	电解纸 Separator	电解电容器纸 Electrolytic capacitors paper	
4	工作电解液 Working electrolyte	乙二醇等 Ethanediol	
5	铝壳 Case	铝 Aluminum case	
6	套管 Sleeve	PET	
7	端子 Terminal	铝 Aluminum wire	
8	盖板 Coverplate	合成橡胶 Synthetic rubber	
9	垫片 Gasket	PP	

NO	项 目 Items	条 件 Conditions	规 格 Specifications
11.1	最大允许纹波电流 Maximum permissible ripple current	温度 Temperature：105±2℃ 纹波：120Hz正弦交流实际电流值+交流电压峰值≤标准电压 Ripple frequency: The maximum sinusoidal alternating current of a freequency specified below at whith the capacitor can be operated continuously,Where DC.Voltage+peak ripple voltage≤Rated voltage.	Refer to table
11.2	浪涌电压 Surge Voltage	在下面规定的温度下，通过指定的浪涌电压，6.0分钟（充电30秒，放电5分30秒）为一循环，往返1000回合，常温常湿下放置1-2小时达到热平衡状态测定满足。 The capacitor shall be subjected to 1000 cycles at a temperature specified below,each consisting of a charge period of 30±5s, followed by a discharge period of approx 5min.30s.And the capacitor shall be stored 1-2hours under standard atmospheric conditions to obtain thermal stability,after which measurement shall be made. 应加电压：见4项 Test voltage:see 4 温度：15～30℃ Test Temperature:15～30℃ 测试回路 Measurement circuit 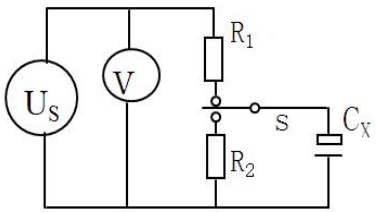 R1:串联保护电阻（1KΩ） Protective series resistor(1kΩ) V:直流电压表 DC Voltage R2:放电电阻 Discharge resister(1KΩ) S:切换开关 Switch Cx:待测电容器 Test Capacitor	漏电流：不超过规定值 Leakage Current: Not more than the specified value 容量变化：初始值的±15%以内 Capacitance change:Within ±15% of theinitial valueinitial value. 损失角：不超过规定值
11.3	静电容量（允许偏差） Capacitance (Tolerance)	测试频率：120Hz Measuring frequency:120Hz 测试电压：0.5Vrms or less measuring voltage:0.5Vrms or less DC bias voltage:+1.5～2.0 V DC	静电容量允许偏差，+20%-20%Capacitance tolerance+20%-20%

NO	项 目 Items	条 件 Conditions	规 格 Specifications
11.4	损耗角正切值 （tgδ) Tangant of angle	测试条件与静电容量相同 Measurement shall be made under the same conditions as those given for the measurement of capacitance	见5项 Refer to table 5.
11.5	漏电流 Leakage Current	电容器接1000±10Ω.的保护电阻施加电压1分钟后的测试电流。 The rated voltage shall be applied across the capacitor and its protective resistor which shall be 1000±10Ω.The leakage Current shall then be measured after an electricantion period of 1min.The leakage current shall be calculated by the following equation. 漏电流：（I）=E/Rs Leakage current: E:直流电压表的电压值 Voltage measured with DC voltmeter Rs:标准电阻的电阻值 Resistance of the protective resistor 测定电路 measurement circuit 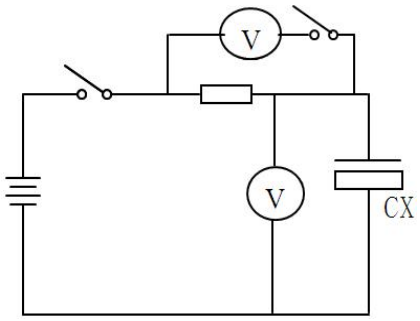 电压将下法 (voltage drop method) Rs:标准电阻的电阻值（1000±100Ω） protective resistor 直流电压表或电子电压表 DC voltmeter or electronic voltmeter S1:开关 switch S2:电压表保护用变换开关 protective switch for a voltmeter CX:待测电容器 test capacitor	见6项 Refer to table 6.

<table>
<tr><th>NO</th><th>项 目
Items</th><th>条 件
Conditions</th></tr>
<tr><td>11.6</td><td>高低温特性
Characteristic at High and low temperature</td><td>
电容器根据下表的次序处理
The capacitor shall subjected in turn to the procedures specified below.
<table>
<tr><th>阶 段
Step</th><th>温 度
Temperature</th><th>时 间
Times</th></tr>
<tr><td>1</td><td>20±2℃</td><td>热平衡状态</td></tr>
<tr><td>2</td><td>-40(-25)℃</td><td>*2hours</td></tr>
<tr><td>3</td><td>20±2℃</td><td>热平衡状态</td></tr>
<tr><td>4</td><td>105℃</td><td>*2hours</td></tr>
<tr><td>5</td><td>20±2℃</td><td>热平衡状态</td></tr>
</table>
* 电容器放置在每一温度下，待阻抗或电容量稳定后方可测试。
* The capacitor should be stored at rech temperature until measured temperature impedance or capacitance are stabilized.
<table>
<tr><td rowspan="2">阶段2
Step2</td><td>阻抗比（对阶段1）
Impedance ratio</td><td>见9.10项
refer to No9.10</td></tr>
<tr><td>静电容量变化率
（对阶段1）
change in capacitance</td><td>静电-20～+20%
within-20～+20%</td></tr>
<tr><td rowspan="2">阶段4
Step4</td><td>静电容量变化率
（对阶段1）
change in capacitance</td><td>静电-20～+20%
within-20～+20% of step 1</td></tr>
<tr><td>漏电流
Leakage Current</td><td>规定值5倍以下
Less than 500% of the specified value</td></tr>
</table>
阶段1：测定容量，损耗和阻抗值。
Step1:Capacitance,Dissipation Factor and impedance shall be measured.
阶段2：放置2小时后，达到热平衡状态再测。
Step2:After the capacitor being stored for 2 hours,capacitance, Dissipation Factor and impedance shall be Measured.The measurement shall be made at thermal stability.
阶段4：放置2小时后，达到热平衡状态测测。
Setp4:After the capacitor being stored for 2 hours,Capacitance, Dissipation Factor and impedance shall be Measured.The measurement shall be made at thermal stability.
</td></tr>
</table>

<table>
<tr><th>NO</th><th>项 目
Items</th><th>条 件
Conditions</th><th>规格
Specifications</th></tr>
<tr><td>11.7</td><td>压力释放
Pressure relief</td><td>一、交流试验 A.C.test
施加电压值：Applied voltage
交流电压不超过0.7倍的额定直流电压或250VAC以下
A.C.voltage not exceeding 0.7times the rated
Direct voltage or 250V AC whichever is
the lower.
频率：Frequency:50Hz或60Hz
串联电阻参照下表 Series resistor refer to
the table below.
<table>
<tr><th>Capacitance</th><th>Series resistor</th></tr>
<tr><td>C≤1μF</td><td>1000±100Ω</td></tr>
<tr><td>1μF＜C≤10μF</td><td>100±10Ω</td></tr>
<tr><td>10μF＜C≤100μF</td><td>10±1Ω</td></tr>
<tr><td>100μF＜C≤1000μF</td><td>1±0.1Ω</td></tr>
<tr><td>1000μF＜C≤10000μF</td><td>0.1±0.01Ω</td></tr>
<tr><td>10000μF＜C</td><td>/</td></tr>
</table>
*电阻相当于试验频率阻抗的1/2
Resistance is equivalent to a half of
Impedance by test frequency.
二、直流试验 D.C.test
施加同额定电压相等的反向电压。
Reversed polarity D.C.rated voltage shall
be applied to the capacitor.
注：1、该规定适用于铝壳直径6mm以上的电容器。
2、试验开始30Min后。防爆装置不动作时，
停止试验。
Note:
1.This requirement applies to capacitors
with a diameter of 6mm or more.
2.When the pressure relief device dose
not open even 30minutes after commencement
of this test,the test may be ended.</td><td>防爆装置打开时，无燃烧、无爆炸或铝壳和封口材料的分离。
The pressure relief device shall open in such a way as to avoid any danger of fire or explosion of Capacitor elements.</td></tr>
</table>

NO	项 目 Items	条 件 Conditions	规 格 Specifications
11.8	高温负荷 Lord life	在105±2℃的恒温箱内，电容器施加最大允许纹波电流，施加直流电压和交流电压的峰值的和要等于额定电压，时间 3000 +24 小时，试验结束后，在标准状态下放置16小时候进行测试。 The capacitor shall be placed in a circulating air oven at an ambient temperature of 105±2℃. It must not be subjected to direct radiation from herting elements.DC voltage and the rated ripple current shown in table shall be applied for a period of 3000 +24 hours,The sum of the DC voltage and peak AC voltage must not exceed the full rated voltage of the capacitor.It shall be subjected to standard atmospheric for 16 hours, after which measurement shall be made.	漏电流：不超过规定值 Leakage current:≤ Initial specified value 容量变化率：初测值的±20%以内 Capacitance change: within±20% of Initial value 损耗角正切：不超过规定值的2倍 Dissipation factor: ≤200% of initial specified value
11.9	高温储存 Shelf life	温度 Temp: 105±2℃ 时间 Time:1000+36小时 电压处理：在常温下电容器串联保护电阻（1KΩ），加额定施加额定电压30分鐘後在放電, 常温放置24-48小时后测量 Condition: The DC rated voltage shall be applied across the capacitor and its protective. resistor (1kΩ) for 1 minutes,The capacitor shall then be stored under standard Atmospheric Conditions for 24-48 hours. 漏电流：施加额定电压一分钟, 常溫下測試, I≤2倍的规定值. Leakage current: rated voltage for one minute I≦applied the provisions of twice the value of	漏电流：施加额定电压一分 钟I≦2倍的规定值. 容量变化率：初测值的±20%以内 Capacitance change: within±20% of Initial value 损耗角正切：不超过规定值的2倍 Dissipation factor: ≤200% of initial specified value

NO	项 目 Items	条 件 Conditions	规 格 Specifications
11.10	可焊性 Solderability	浸 渍 时 间 Solder presstime: 2±0.5s 焊 接 温 度 Solder temperature: 235±5℃	浸渍面积90%以上附着 At least90%of Circumferential surface of the dipped portion of termination shall be covered with new solder
11.11	耐焊接热 Resistance to soldering heat	温度：350±10℃ Test Temperature:350±10℃ 时间：3.5±0.5s Test time:3.5±0.5s	漏电流：不超过规定值 Leakage current: Not more than the specified value 电容量变化：初测值的±10%以内 Capacitance Change : within±10% of the initial value 损耗角正切：不超过规定值 Dissipation Factor: Not More than the specified value 外观：无明显异常 Appearance: No remarkable abnormality
11.12	耐湿性 Resistance of dump heat	温度：40±2℃ Test Temperature:40±2℃ 湿度：90-95%Rh Relative Hwmidity:90-95%Rh 时间：56天 Test time:56 days 试验后常温放置1-2小时 To expose in the atmospheric condition for 1 to 2 hours after completion of test	漏电流：不超过规定值 Leakage current: Not more than the specified value 电容量变化：初测值的±10%以内 Capacitance Change : within±10% of the initial value 损耗角正切：不超过规定值 Dissipation Factor: Not More than the specified value 外观：无明显异常 Appearance: No remarkable abnormality

NO	项 目 Items	条 件 Conditions	规 格 Specifications
11.13	耐振性 Resistance to vibration	频率：10-55-10Hz/分 Frequency: From 10 to 55 Hz and return to 10 Hz,shall be transferred in 1 Min Total Amplitude:1.5mm 条件：X.Y.Z 方向各2小时 Direction and duration of vibration： 3 orthogonal directions mutually each for 2 hours Total 6 hours. 静电容量变化：初始值的±5%以内 Capacitance change: Within ±5% of the initial value	静电容量测试时无接触不良，断线及短路，端子无机械损伤。 Capacitance:During the test,measured value to be stabilized(when measured several times within 30 min before completion of test) Appearance:No remarkable abnormality 外观：无明显异常 Appearance: No remarkable abnormality
11.14	耐溶剂性 Resisting Solvent	溶剂：异丙醇 Solvent:Isopropylalcohol 温度：20-25℃ Temperature:20-25℃ 时间：30±5s Time:30±5s	外观：无明显异常 Appearance: No remarkable abnormality
11.15	端子强度 Terminal Strength 拉伸度 Tensile test intensity 弯曲强度 winding intensity	拉力：端子应能承受不小于20N的拉力后，端子无可见损伤，端子的铆接处不松动。 Tension:The terminal is required to withstand the tension of no less than 20N without noticeable damages and loose of rivet joint. 扭曲力：端子应能承受不小于15N的扭曲力并在180º方向上受力两次，端子无可见损伤，端子的铆接处不松动。 Torsion:The terminal is required to endure the torsion of no less than 15N and can bear force twice at an angle of 180º without noticeable damages and loose of rivet joint.	测定静电容量时，无接触不良，开路和短路现象，另外无机械损伤和端子损伤。 When the capacitance is measured,there shall be no intermittent contacts or open-or short-circuiting. There shall be no such mechanical damage as terminal damage etc.
11.16	绝缘耐压 insulation withstanding voltage	2000VAC施加于短路的端子和固定卡箍之间，1分钟不破坏 A voltage of 2000VAC is applied for one minute between the terminals shorted each other and the mounting clamp on insulating sleeve covering the case,there shall not be damaged.	外观：无明显异常 Appearance: No remarkable abnormality

STANDARD NUMBER

1	2	3	4	5	6	7	8	9	10	11	12	13	14	15	16	17	18
D	X	Z	1	0	0	M	2	2	7	H	2	0	0	S	1	A	A

电容总类别	系列	电压	容差	容量	φ别	高度	套管颜色	加工	电气特性	印刷特殊

1		2,3	4，5，6		7		8，9，10		11		12，13		14		15,16		17		18	
classification		Series	Voltage		cap tol		Capacitance		dimension				Sleeve		Diameter (Φ)		Electrical characteristics		SleeveMaterial	
Category	Code		Voltage	Code	cap tol	Code	CAP(uF)	Code	Φ	Code	Height	Code	Color	Code	process	Code		Code		Code
导针型	D	KFL	4	004	±5	J	0.1	104	3	A	05	05	咖啡白字	0	长脚	S1	标准值	A	标准印刷	A
牛角型	L	KFN	6.3	6R3	±10	K	0.22	224	4	B	07	07	咖啡金字	1	直切	C0	DF特殊	B		
固态型	G	KSS	10	010	±15	L	0.33	334	5	C	09	09	咖啡银字	2			ESR特殊	C		
贴品型	T	KSL	16	016	±20	M	1	105	6	D	11	11	黑体银字	3	成型截断	F0	IMPEDANCE特殊	D	周管控	B
超电型	C	KSE	25	025	-10	U	2.2	225	6.3	E	12	12	黑体白字	4						
锂电型	B	KSN	35	035	+20		3.3	335	7	F	14	14	黑体红金	5			R.C特殊	E		
固液型	P	KNS	50	050	-10	P	4.7	475	8	G	15	15	黑体青金	6	垂直弯曲截断	V0	LC特殊	F	代理工厂	C
螺栓型	S	KNG	63	063	+30		6.8	685	10	H	16	16	黑体科金	7			客户特殊要求	H		
		KLS	80	080	-10	S	10	106	12	J	20	20	白体黑字	8						
		KGA	100	100	+50		15	156	12.5	K	25	25	白体银字	9	成型截断	Z0			包装印刷特殊	D
		KGM	125	125	-20	Y	22	226	13	L	30	30	墨绿白字	A						
		KGR	160	160	+80		100	107	16	M	35	35	墨绿青金	B						
		KXC	200	200	0	Q	120	127	18	N	40	40	紫色银字	C						
		KXB	250	250	+20		150	157	20	P	45	45	紫体白字	D						
		KXD	315	315			220	227	22	Q	50	50	宝蓝金字	E						
		KXE	330	330			470	477	25	R	11.5	1B	天蓝白字	F						
		KXF	350	350			1000	108	30	S	12.5	1C	深蓝白字	G						
		KXL	400	400			1200	128	35	T	16.5	1G	天蓝黑字	H						
		KFW	420	420			1500	158	40	U	17.5	1H	深蓝黑字	J						
		KSW	450	450			10000	109	45	V	31.5	3B	蓝体银字	K						
		KXJ	500	500			15000	159	51	W			裸品	Z						
		KXK	550	550			22000	229					天蓝银字	I						
		KXW	600	600			33000	339												
		KXZ																		
		KSZ																		
		KSM																		
		KSB																		