

钍地半导体
Tudi Semiconductor

Product Specification

TUDI-LT1764

3A, Fast Transient Response, Low Noise, LDO Regulators

网址 www.sztdbdt.com

用芯智造·卓越品质

semiconductor device manufacturer

- Design
- research and development
- production
- and sales

FEATURES

- Optimized for Fast Transient Response
- Output Current: 3A
- Dropout Voltage: 400mV at 3A
- Quiescent Current tage Range: 2.7V to 20V
- No Protection Diodes Needed
- Controlled Quiescent Current in Dropout
- Fixed Output Voltages: 3.3V
- Adjustable Output from 1.21V to 20V
- Stable with 10μF Output Capacitor*
- Stable with Ceramic Capacitors*
- Reverse Battery Protection
- No Reverse Current
- Thermal Limiting

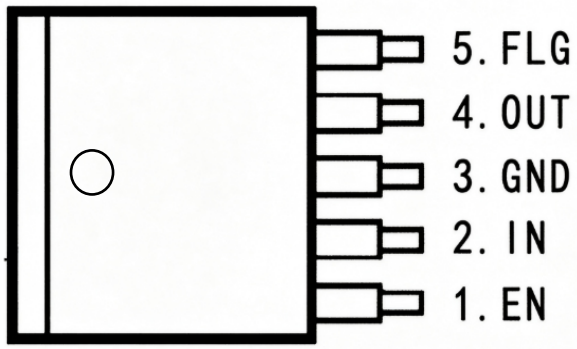

LT1764-3.3 TO-263-5/TO220-5

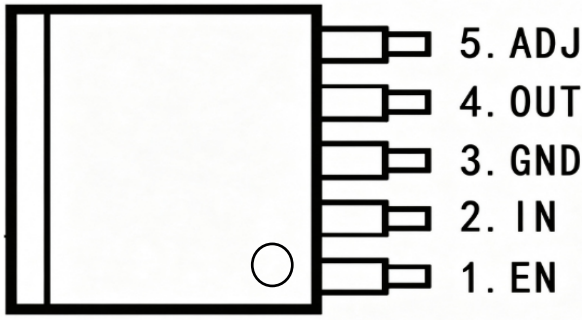

LT1764-ADJ TO-263-5/TO220-5

APPLICATIONS

- LDO linear regulator for PC add-in cards
- High-efficiency linear power supplies
- Multimedia and PC processor supplies
- SMPS post regulator
- Low-voltage microcontrollers
- Post Regulator for Switching Supplies

DESCRIPTION

The 1764 is a low dropout regulator optimized for fast transient response. The device is capable of supplying 3A of output current with a dropout voltage of 400mV. Operating quiescent current is 1mA, dropping to <1μA in shutdown. Quiescent current is well controlled; it does not rise in dropout as it does with many other regulators. In addition to fast transient response, the LT1764 has very low output voltage noise which makes the device ideal for sensitive RF supply applications.

Output voltage range is from 1.21V to 20V. The LT1764 regulators are stable with output capacitors as low as 10μF.

Internal protection circuitry includes reverse battery protection, current limiting, thermal limiting and reverse current protection. The device is available in fixed output voltages of 3.3V and as an adjustable device with a 1.21V reference voltage. The LT1764 regulators are available in 5-lead TO-220 and TO-263 packages.

Order information

Order Number	Package	Package Quantity	Marking On The park	Temperature
LT1764AEQ-TUDI	TO263	Tape,Reel,500	LT1764AEQ	-40℃ to +125℃
LT1764AET-TUDI	TO220	Tube,50,A box of 1000	LT1764AET	
LT1764AEQ-3.3-TUDI	TO263	Tape,Reel,500	LT1764AEQ-3.3	

Pin description

Pin Number 1764-3.3	Pin Number 1764-ADJ	Pin Name	Pin Name
1	1	EN	CMOS-compatible control input.Logic high =enable,logic Logic low or open =Shutdown
2	2	IN	Supply(Input):+16V maximum supply
3	3	GND	Ground pin and TAB are internally connected.
4	4	OUT	Regulator Output
-	5	ADJ	Adjustment Input:Feedback input.
5	–	FLG	Flag(Output):Open-collector error flag output.

ABSOLUTE MAXIMUM RATINGS

Symbol	Parameter	Value	Unit
V_{IN}	Supply Voltage	-20 to+20	V
V_{EN}	Enable Voltage	+20	V
T_S	Storage Temperature	-65 to+150	℃
ESD	Lead Temperature (soldering,10 sec)	245	℃

TYPICAL APPLICATION CIRCUIT

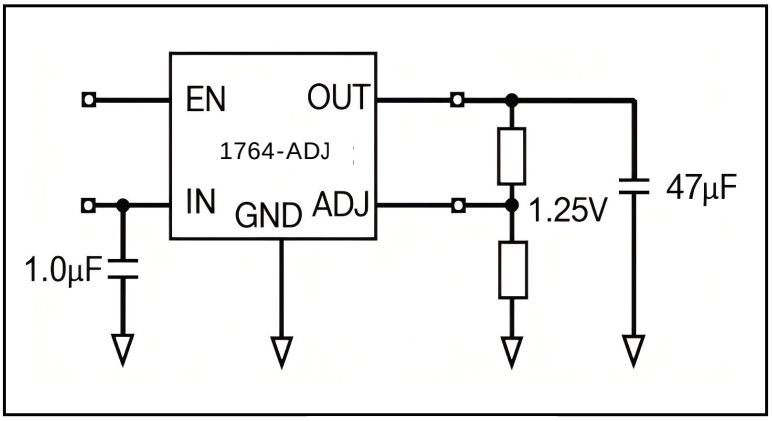

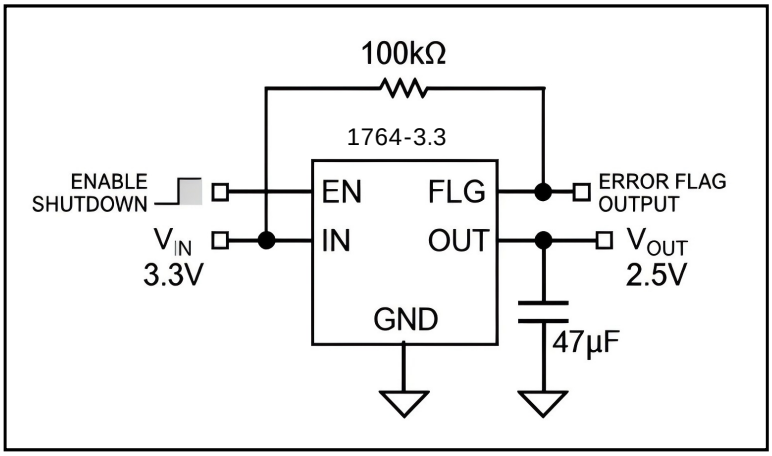

OPERATING RATINGS

Symbol	Parameter	Value	Unit
VIN	Supply Voltage	+2.25 to +16	V
VEN	Enable Voltage	+16	V
PD(max)	Maximum Power Dissipation	Note 4	
TJ	Junction Temperature(1)	-40 to+125	℃
Package Thermal Resistance			
θJC	TO-263	5	℃/W
θJC	TO-220	2	℃/W

Note(1) :Operating temperature range: -40°C to +125°C. This product is designed for industrial grade applications. For automotive grade versions compliant with AEC-Q100, please conduct internal screening per the standard or contact our sales team for availability.

BLOCK DIAGRAM

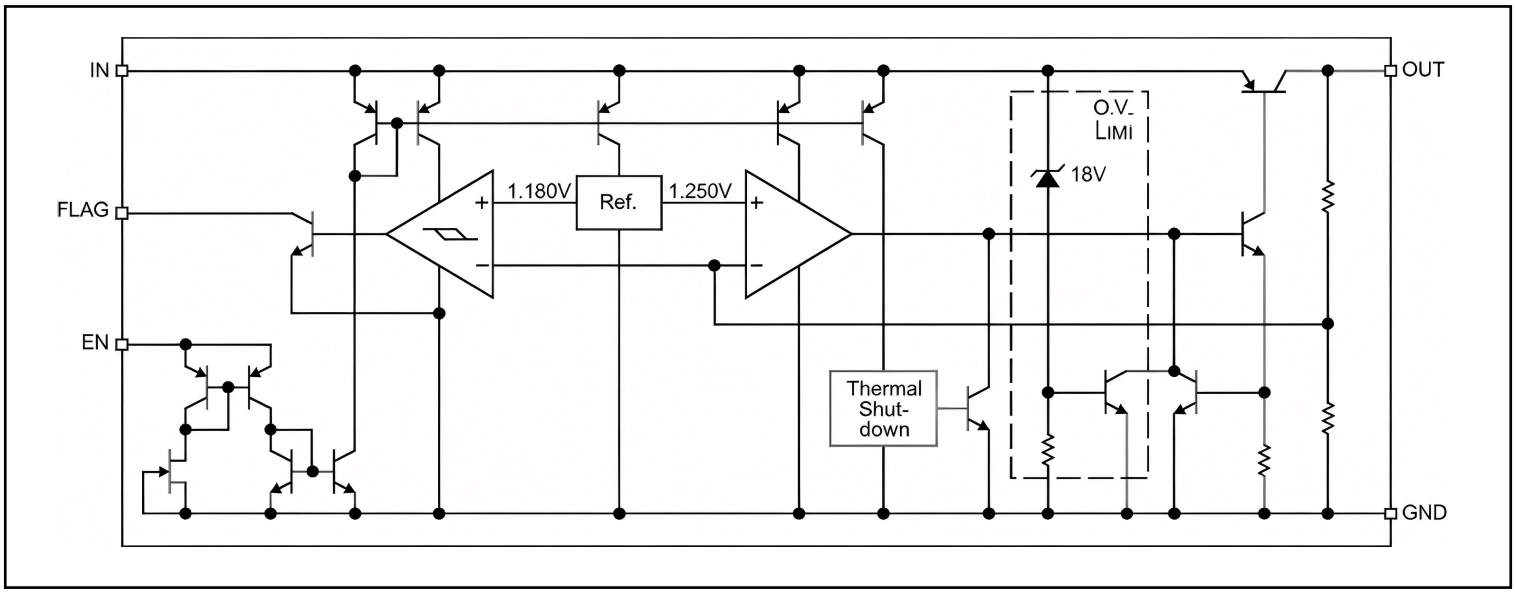

LT1764-3.3 Fixed with Flag and Enable

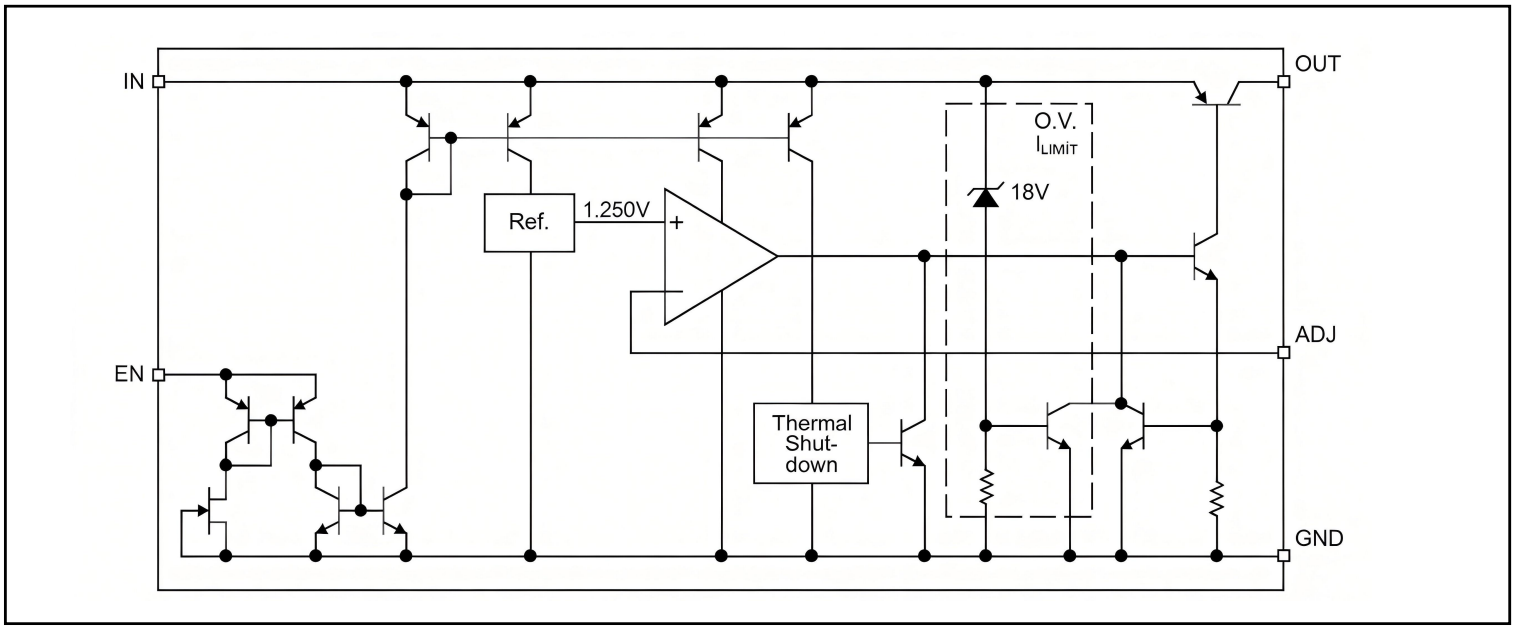

LT1764 Adjustable

ELECTRICAL CHARACTERISTICS

T_J=25°C,bold values indicate -40°C ≤ T_J ≤ +125°C:unless noted

Symbol	Parameter	Conditions	Min	Typ	Max	Units
V_{OUT}	Output Voltage	10mA 10mA≤I_{OUT}≤3A,V_{OUT}+1V≤V_{IN}≤8V	-1 -2		1 2	% %
-	Line Regulation	I_{OUT}=10mA,V_{OUT}+1V≤V_{IN}≤8V	-	0.06	0.5	%
-	Line Regulation	V_{IN}=VouT+1V,10mA≤I_{OUT}≤3A	-	0.2	1	%
△V_{OUT}/△T	OutputVoltageTemp. Coefficient,Note5		-	20	100	ppm/°C
V_{DD}	Dropout Voltage, Note6	I_{OUT}=100mA,△V_{OUT}=-1%	-	80	200	mV
		I_{OUT}=750mA,△V_{OUT}=-1%	-	200	-	mV
		I_{OUT}=1.5A,△V_{OUT}=-1%	-	320	-	mV
		I_{OUT}=3A,△V_{OUT}=-1%	-	400	500	mV
I_{GND}	Ground Current, Note7	I_{OUT}=750mA,V_{IN}=V_{OUT}+1V		10	20	mA
		I_{OUT}=1.5A,V_{IN}=V_{OUT}+1V		17		mA
		I_{OUT}=3A,V_{IN}=V_{OUT}+1V		45		mA

ELECTRICAL CHARACTERISTICS(continue)

T_J=25℃,bold values indicate -40℃ ≤ T_J ≤ +125℃:unless noted

Symbol	**Parameter**	**Conditions**	**Min**	**Typ**	**Max**	**Units**
IGND(do)	Dropout Ground PinCurrent	VIN≤VoUT(nomina)-0.5V,loUT=10mA		6		mA
loUT(im)	Current Limit	VoUT=0V, VIn=VoUT+1V		4.5		A
Flag Output(LT1764-3.3)						
lFLG(leak)	Output Leakage Current	VoH=16V		0.01	12	μA μA
VFLG(do)	Output Low Voltage	VIN=2.250V, loL,=250μA,Note9		220	300 400	mV mV
VFLG	Low Threshold	%of VouT	93			%
	High Threshold				99.2	%
	Hysteresis			1		%
LT1764DJ Only						
	Reference Voltage	Note10	1.238 1.225 1.213	1.250	1.262 1.275 1.227	V V V
	Adjust Pin Bias Current			40	80 120	nA nA
	Reference VoltageTemp. Coefficient	Note7		20		ppm/℃
	Adjust Pin Vias CurrentTemp.Coefficient			0.1		nA℃

Note 1. Exceeding the absolute maximum ratings may damage the device.
Note 2. The device is not guaranteed to function outside its operating rating.
Note 3. Devices are ESD sensitive. Handling precautions recommended.
Note 4. PD(max) = (TJ(max) − TA) θJA, where θJA depends upon the printed circuit layout. See “ Applications Information. ”
Note 5.Vout temperature coefficient is ΔVOUT(worst case) (TJ(max) − TJ(min)) where TJ(max) is +125℃ and TJ(min) is 0℃
Note 6. VDO = VIN − VOUT when VOUT decreases to 99% of its nominal output voltage with V IN = VOUT + 1V.
Note 7. IGND is the quiescent current. IIN = I GND + IOUT.
Note 8. VEN 0.8V, VIN 8V, and VOUT = 0V
Note 9. For a 2.5V device, V IN = 2.250V (device is in dropout).
Note 10.VREF ≤ VOUT ≤ (VIN − 1V), 2.25V ≤ VIN ≤ 16V, 10mA ≤ IL ≤ 3A, TJ = TMAX

APPLICATION INFORMATION

The 1764-3.3 is a high-performance low-dropout voltage regulator suitable for moderate to high-current voltage regu-lator applications. Its 500mV dropout voltage at full load makes it especially valuable in battery-powered systems and as a high-efficiency noise filter in postregulator applications.Unlike older NPN-pass transistor designs, where the mini-mum dropout voltage is limited by the base-to-emitter voltage drop and collector-to- emitter saturation voltage, dropout per-formance of the PNP output of these devices is limited only by the low V CE saturation voltage. A trade-off for the low dropout voltage is a varying base drive requirement. The LT1764 regulator is fully protected from damage due to fault conditions. Current limiting is provided. This limiting is linear output current during overload conditions is constant. Thermal shutdown disables the device when the die temperature exceeds the maximum safe operating tem-perature. Transient protection allows device (and load) sur- vival even when the input voltage spikes above and below nominal. The output structure of these regulators allows voltages in excess of the desired output voltage to be applied without reverse current flow.

Thermal Design

Linear regulators are simple to use. The most complicated design parameters to consider are thermal characteristics. Thermal design requires four application-specific param-eters:
Maximum ambient temperature (TA)
- Output Current(I_{OUT})
- Output Voltage(V_{OUT})
- Input Voltage(V_{IN})
- Ground Current (I_{GND})

Calculate the power dissipation of the regulator from these numbers and the device parameters from this datasheet,where the ground current is taken from the data sheet.

$$P_D=(V_{IN}-V_{OUT})I_{OUT}+V_{IN}\cdot I_{GND}$$

The heat sink thermal resistance is determined by:

$$\theta_{SA}=(T_{JMAX}-T_A)/P_D-(\theta_{JC}+\theta_{CS})$$

where TJ (max) 125 °C and θ CS is between 0°C and 2°C/W.
The heat sink may be significantly reduced in applications where the minimum input voltage is known and is large compared with the dropout voltage. Use a series input resistor to drop excessive voltage and distribute the heat between this resistor and the regulator. The low

dropout properties of Taejin regulators allow signifi-cant reductions in regulator power dissipation and the asso-ciated heat sink without compromising performance. When this technique is employed, a capacitor of at least 1.0F is needed directly between the input and regulator ground.Refer to Application Note 9 for further details and examples on thermal design and heat sink specification.

Output Capacitor

The LT1764 requires an output capacitor to maintain stability and improve transient response. Proper capacitor selection is important to ensure proper operation. The LT1764 output capacitor selection is dependent upon the ESR (equivalent series resistance) of the output capacitor to maintain stability. When the output capacitor is 47F or greater, the output capacitor should have less than 1 of ESR. This will improve transient response as well as promote stability. Ultralow ESR capacitors, such as ceramic chip capacitors may promote instability. These very low ESR levels may cause an oscillation and/or underdamped tran-sient response. A low-ESR solid tantalum capacitor works extremely well and provides good transient response and stability over temperature. Aluminum electrolytics can also be used, as long as the ESR of the capacitor is < 1. The value of the output capacitor can be increased without limit. Higher capacitance values help to improve transient response and ripple rejection and reduce output noise.

Input Capacitor

An input capacitor of 1F or greater is recommended when the device is more than 4 inches away from the bulk ac supply capacitance, or when the supply is a battery. Small, surface-mount, ceramic chip capacitors can be used for the bypass-ing. Larger values will help to improve ripple rejection by bypassing the input to the regulator, further improving the integrity of the output voltage.Transient Response and 3.3V.

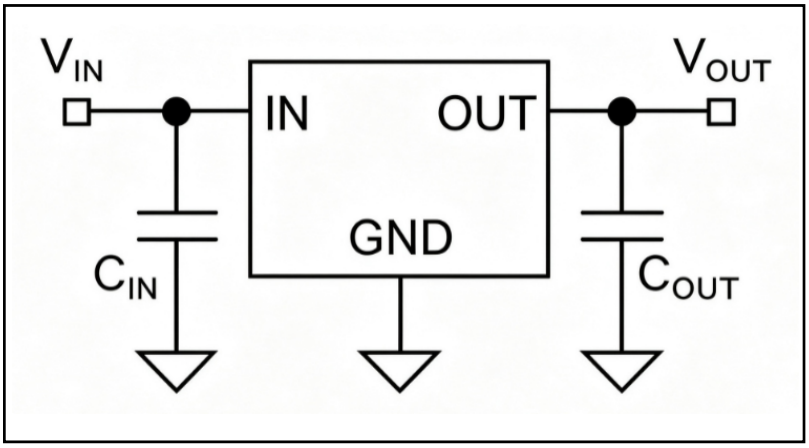

Fig 1. LT1764-3.3 apacitor Requirements

Package TO220-5

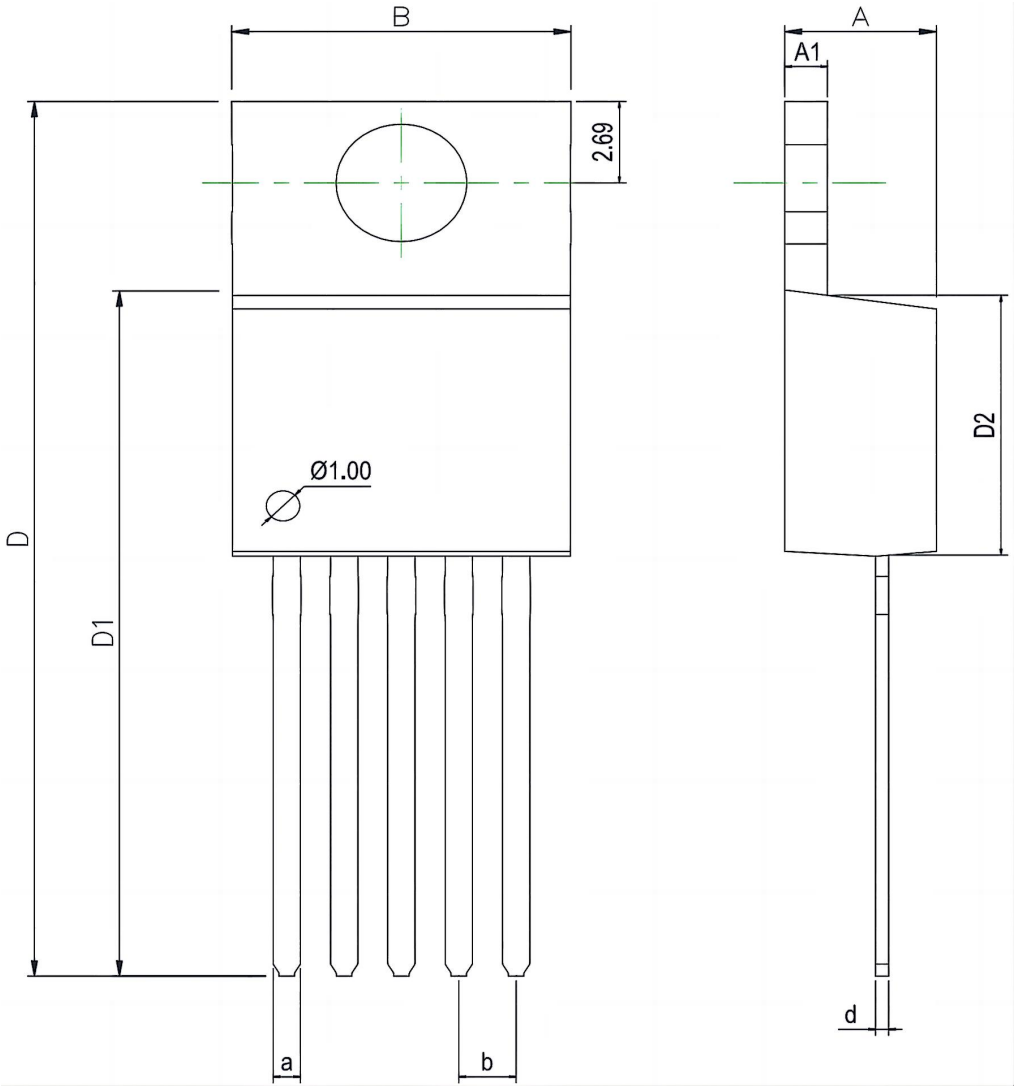

Dimensions In Millimeters(TO-220-5)									
Symbol:	**A**	**A1**	**B**	**D**	**D1**	**D2**	**a**	**d**	**b**
Min:	4.52	1.25	10	28.2	22.4	8.69	0.71	0.33	1.70BSC
Max:	4.62	1.29	10.3	28.9	22.6	8.79	0.97	0.42	

Package TO263-5

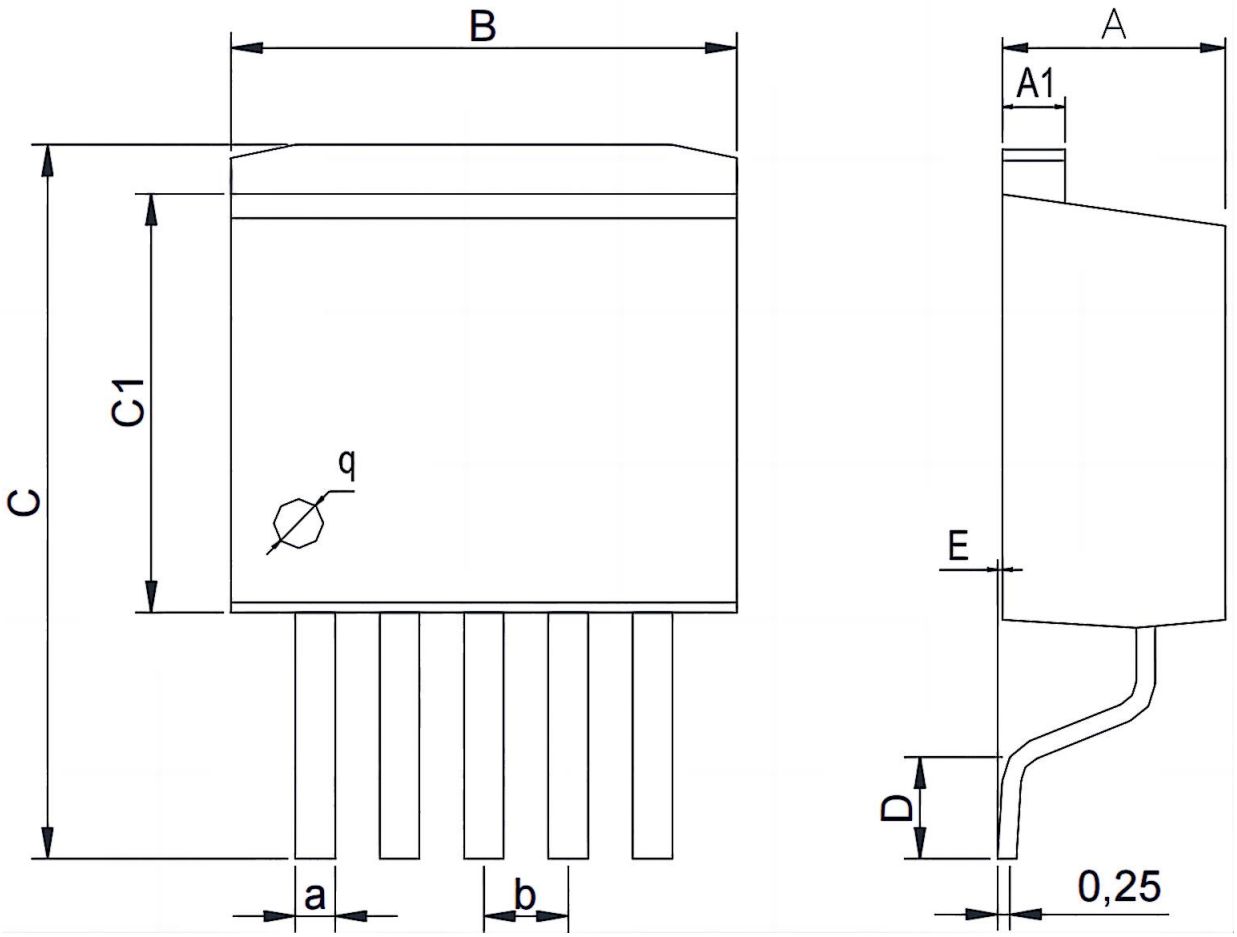

Dimensions In Millimeters(TO-263-5)									
Symbol:	**A**	**A1**	**B**	**C**	**C1**	**D**	**E**	**a**	**b**
Min:	4.45	1.22	10	13.7	8.40	1.90	0	0.71	1.70BSC
Max:	4.62	1.32	10.4	14.6	8.90	2.10	0.20	0.97	

Minimum Load Current

The LT1764 regulator is specified between finite loads.
If the output current is too small, leakage currents dominate and the output voltage rises. A 10mA minimum load current is necessary for proper regulation.

Transient Response and 3.3V to 2.5V Conversion

The LT1764 has excellent transient response to varia-tions in input voltage and load current. The device has been designed to respond quickly to load current variations and input voltage variations. Large output capacitors are not required to obtain this performance. A standard 47F output capacitor, preferably tantalum, is all that is required. Larger values help to improve performance even further.By virtue of its low-dropout voltage, this device does not saturate into dropout as readily as similar NPN-based de-signs. When converting from 3.3V to 2. 5V, the NPN-based regulators are already operating in dropout, with typical dropout requirements of 1.2V or greater. To convert down to 2.5V without operating in dropout, NPN-based regulators require an input voltage of 3.7V at the very least. The LT1764 regulator will provide excellent performance with an input as low as 3.0V. This gives the PNP-based regulators a distinct advantage over older, NPN-based linear regulators.

Error Flag

The MIC29301 version features an error flag circuit which monitors the output voltage and signals an error condition when the voltage drops 5% below the nominal output voltage. The error flag is an open-collector output that can sink 10mA during a fault condition.Low output voltage can be caused by a number of problems, including an overcurrent fault (device in current limit) or low input voltage. The flag is inoperative during overtemperature shutdown.

Enable Input

The MIC29301 version features an enable input for on/off control of the device. Its shutdown state draws “ zero ” current (only microamperes of leakage). The enable input is TTL/ CMOS compatible for simple logic interface, but can be connected to up to 20V. When enabled, it draws approxi-mately 15A.

Adjustable Regulator Design

The MIC29302 allows programming the output voltage any-where between 1.25V and the 16V maximum operating rating of the family. Two resistors are used. Resistors can be quite large, up to 1MΩ, because of the very high input impedance and low bias current of the sense comparator: The resistor values are calculated by : R1=R2(Vout/1.250- 1)
Where VO is the desired output voltage. Figure 1 shows component definition. Applications with widely varying load currents may scale the resistors to draw the minimum load current required for proper operation (see below).