GT4899B
Low Power, Dual SIM Card Analog Switch

1 Features	2 Application
- Low on-resistance: 3.5 Ω @ 4.5 V(typ) - Low on-resistance flatness: 1 Ω @ 4.5 V(typ) - Operate from 1.65 V to 5.5 V - Rail-to-Rail signal switching range - Fast switching speed:14ns @ 3.3 V(typ) - High off isolation:-73dB @ 1MHz - Crosstalk:-89dB @ 10MHz - -3dB bandwidth:350MHz - Package:QFN-3×3-16L and UTQFN1.8×2.6-16L	- Dual SIM card switch - Cell phones - Pad - Digital cameras - PDAs - Notebook

3 Description	Circuit Diagram
The GT4899 is a QPDT switch with one common control inputs targeted at dual SIM card multiplexing. It is optimized for switching the WLAN-SIM data and control signals and dedicates one channel as a supply-source switch. The switches are fully bi-directional, allowing both multiplexing and de-multiplexing operation. Break-before-make operation is guaranteed. The device operates from a +1.65V to +5.5V supply and over the extended -40°C to +85°C temperature range. It is available in QFN-3×3-16L and UTQFN1.8×2.6-16L.	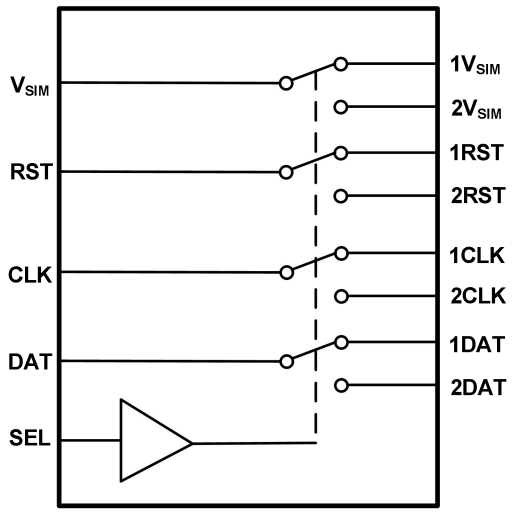

4 Revision History

Revision	Date	Note
Rev. A0. 1	2025. 01. 20	Original Version
Rev. A1. 0	2025. 01. 22	Official Version

The latest datasheet version should be checked on the GTIC official website, as the company does not actively inform customers about updates to the datasheet.

5 Device Summary, Pin and Packages

Table 5-1. Device Summary(1)

Serial Name	Part Name	Package	Body Size (Nom)	Marking(2)(4)	MSL(3)	Package Qty
GT4899B	GT4899BQE	QFN3×3-16L	3.00mm×3.00mm×0.75mm	GT4899B XXXXX	3	Tape and Reel,5000
GT4899B	GT4899BUE	UTQFN1.8×2.6-16L	1.80mm×2.60mm×0.55mm	4899B XXXX	3	Tape and Reel,3000

(1) For all available packages, please contact product sales.

(2) There may be additional marking, which relates to the lot trace code information (data code and vendor code), the logo or the environmental category on the device.

(3) MSL, The Moisture Sensitivity Level rating according to the JEDEC industry standard classifications.

(4) "XXXXX" in Marking will be appeared as the batch code.

5 Device Summary, Pin and Packages(Continued)

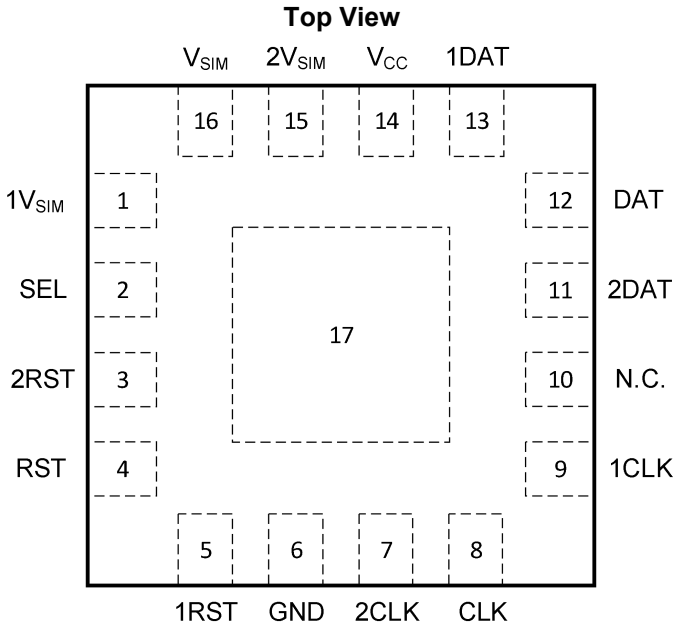

Fig.5-1. GT4899B: QE (QFN3×3-16L) Package

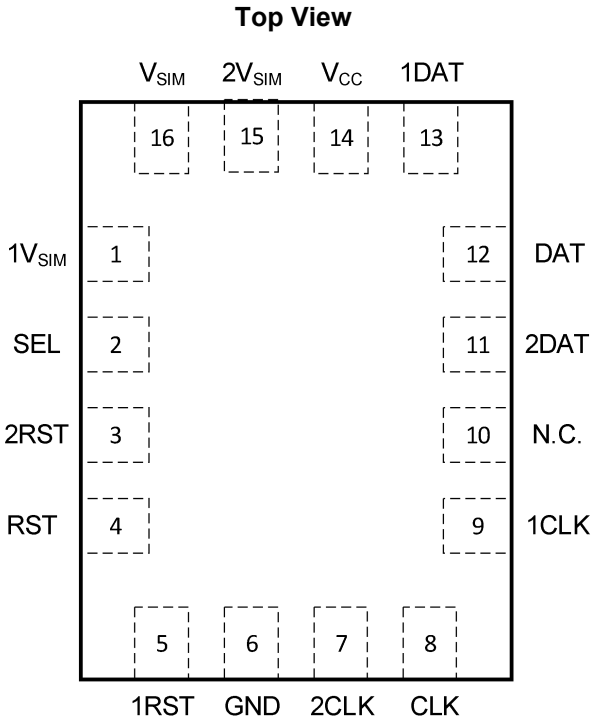

Fig.5-2. GT4899B: UE (UTQFN1.8×2.6-16L) Package

Table 5-2 Pin definition

Pin		Description
Name	QE UE	
$1V_{SIM}$	1	SIM supply output 1
SEL	2	Select input
2RST	3	RST normally open terminal
RST	4	RST common terminal
1RST	5	RST normal closed terminal
GND	6	Ground
2CLK	7	CLK normally open terminal
CLK	8	CLK common terminal
1CLK	9	CLK normal closed terminal
N.C.	10	Not connect
2DAT	11	DAT normally open terminal
DAT	12	DAT common terminal
1DAT	13	DAT normal closed terminal
V_{CC}	14	Supply Voltage
$2V_{SIM}$	15	SIM supply output 2
V_{SIM}	16	SIM supply input

Table 5-3 Function Table

SEL	Switch state
0	1DAT=DAT,1RST=RST,1CLK=CLK,$1V_{SIM}$=V_{SIM}
1	2DAT=DAT,2RST=RST,2CLK=CLK,$2V_{SIM}$=V_{SIM}

6 Voltage, Temperature, ESD and Thermal Ratings

6.1 Absolute Maximum Ratings(1)

Parameters		Min.	Max.	Unit
V_{CC}	Supply voltage range	-0.3	6.0	V
V_{IN}	Input voltage range	-0.3	6.0	V
	Analog, Digital voltage Range(2)	-0.3	V_{CC}+0.3	V
	Continuous Current NO,NC or COM	-100	+100	mA
I_{PEAK}	Continuous Channel current	-160	+160	mA
T_J	Junction temperature	-65	150	°C
T_{stg}	Storage temperature	-65	150	°C

(1) Stresses beyond those listed under "Absolute Maximum Ratings" may cause permanent damage to the device. These are stress ratings only, and functional operation of the device at these or any other conditions beyond those indicated under "Recommended Operating Conditions" is not implied. Exposure to absolute-maximum-rated conditions for extended periods may affect device reliability.
(2) The input and output negative-voltage ratings may be exceeded if the input and output current ratings are observed.

6.2 ESD Ratings

ESD			Value	Unit
V(ESD)	Electrostatic discharge	Human-Body Model (HBM)(1)	3.5 K	V
		Charged-Device Model (CDM)(2)	2 K	V

(1) JEDEC document JEP155 states that 500-V HBM allows safe manufacturing with a standard ESD control process.
(2) JEDEC document JEP157 states that 250-V CDM allows safe manufacturing with a standard ESD control process.

6.3 Recommended Operating Conditions(1)

Over operating free-air temperature range (unless otherwise noted)

Symbol	Parameter		Min	Max	Units
V_{CC}	Supply voltage	Operating	1.65	5.5	V
V_{CTRL}	Control Input voltage	Operating	0	V_{CC}	V
V_{SW}	Switch I/O voltage	Operating	0	V_{CC}	V
T_A	Ambient temperature		-40	85	°C

(1) All unused digital inputs of the device must be held at V_{CC} or GND to ensure proper device operation.

7 Electrical Specifications

7.1 DC Electrical Characteristics

V_{CC}=1.65V to 5.5V, FULL=–40°C to +125°C. Typical values are at TA=+25°C (unless otherwise noted)

Parameter	Symbol	Conditions	V_{CC}	Temp	Min	Typ	Max	Units
Analog Signal Range	V_{NO},V_{NC},V_{COM}				0		V_{CC}	V
On-Resistance	R_{ON}	V_{NO} or V_{NC}=V_{CC}/2, I_{COM}=-100mA	4.5V	+25°C		3.5	6	Ω
			3V	+25°C		7	10	
			2.3V	+25°C		12	22	
			1.65V	+25°C		15	27	
On-Resistance Match Between Channels	Δ R_{ON}	V_{NO} or V_{NC}=V_{CC}/2, I_{COM}=-100mA	4.5V	+25°C		0.3	1	Ω
			3V	+25°C		1	3	
On-Resistance Flatness	RFLAT (ON)	0≤V_{NO} or V_{NC}≤V_{CC}, I_{COM}=-100mA	4.5V	+25°C		1	1.5	Ω
			3V	+25°C		3.5	5.5	
			2.3V	+25°C		9	14	
			1.65V	+25°C		12	18	
NC,NO Off Leakage Current	$I_{NC(OFF)}$,$I_{NO(OFF)}$	V_{NO} or V_{NC}=1V, 4.5V, V_{COM}=4.5V, 1V	5.5 V	Full			1	μA
NC,NO,COM On Leakage Current	$I_{NC(ON)}$,$I_{NO(ON)}$, $I_{COM(ON)}$	V_{COM}=1V, 4.5V, V_{NO} or V_{NC}=1V, 4.5V,or floating	5.5 V	Full			1	μA
Input High Voltage	V_{INH}		4.5V	Full	1.8			V
			3V	Full	1.5			V
Input Low Voltage	V_{INL}		4.5V	Full			0.5	V
			3V	Full			0.4	V
Input Leakage Current	I_{IN}	V_S=V_{CC} or 0	5.5 V	Full			1	μA
Power Supply Current	I_{CC}	V_S=GND or V_{CC}	5.5 V	Full			1	μA

7 Electrical Specifications(Continued)

7.2 Switch And AC Characteristics

V_{CC}=1.65V to 5.5V, FULL=–40°C to +125°C. Typical values are at TA=+25°C (unless otherwise noted)

Parameter	Symbol	Conditions		V_{CC}	Temp	Min	Typ	Max	Units
Turn-On Time	t_{ON}	$V_{COM}=V_{CC}$, R_L=300Ω, C_L=35pF		5V	+25°C		10		ns
				3.3V			14		
Turn-Off Time	t_{OFF}	$V_{COM}=V_{CC}$, R_L=300Ω, C_L=35pF		5V	+25°C		20		ns
				3.3V			22		
Break-Before-Make Time Delay	t_{BBM}	$V_{NO1}=V_{NC1}=V_{NO2}=V_{NC2}$=3V R_L=300Ω,C_L=35pF		5V	+25°C		12		ns
				3.3V			20		
Off Isolation	O_{ISO}	R_L=50Ω,Switch OFF	f=10MHz	3.3V	+25°C		-52		dB
			f=1MHz				-73		
Crosstalk Isolation	X_{TALK}	R_L=50Ω,Switch OFF,f=10MHz		3.3V	+25°C		-89		dB
-3dB Bandwidth	BW	R_L=50Ω,Switch ON		3.3V	+25°C		350		MHz
Charge Injection	Q	C_L=1nF, V_{GEN}=0V, R_{GEN}=0Ω		5V	+25°C		6		pC
				3.3V			4		
NC,NO Off Capacitance	$C_{NC(OFF)}$, $C_{NO(OFF)}$	f=1MHz		3.3V	+25°C		15		pF
NC,NO,COM On Capacitance	$C_{NC(ON)}$, $C_{NO(ON)}$, $C_{COM(ON)}$	f=1MHz		3.3V	+25°C		8		pF

8 Typical Characteristics

V_{CC}=1.65V or 5.5V, FULL=–40°C to +125°C. Typical values are at TA=+25°C (unless otherwise noted)

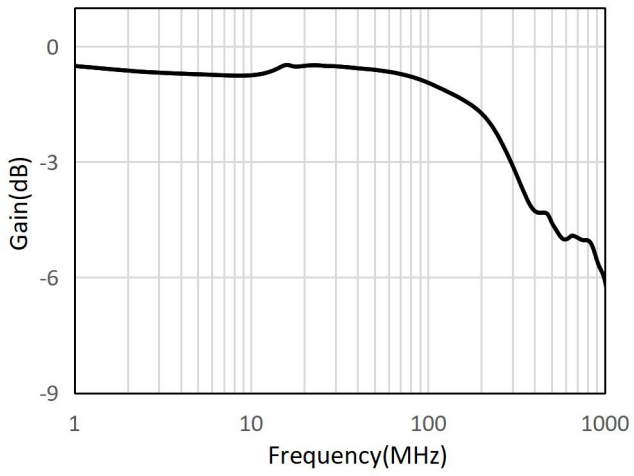

Fig.8-1. Bandwidth vs Frequency at 3.3V V_{CC}

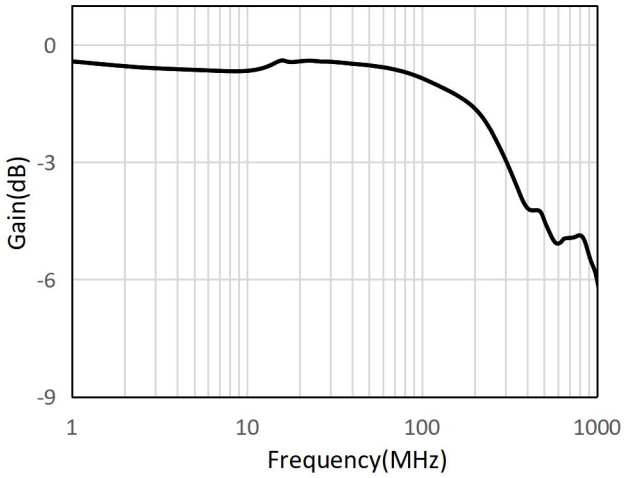

Fig.8-2. Bandwidth vs Frequency at 5V V_{CC}

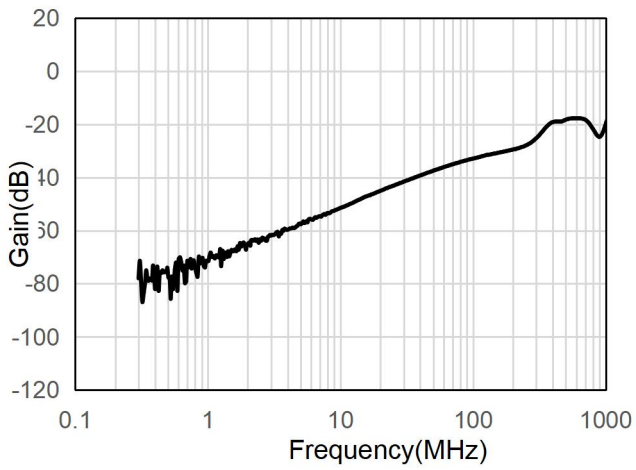

Fig.8-3. Off Isolation vs Frequency at 3.3V V_{CC}

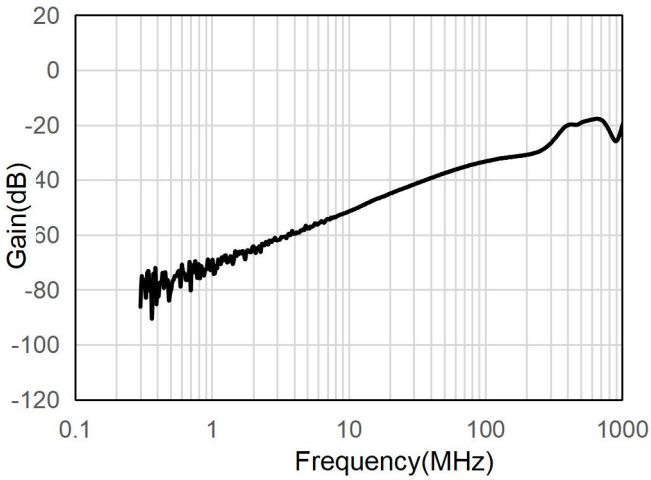

Fig.8-4. Off Isolation vs Frequency at 5V V_{CC}

9 Measurement Information

COM=V_{SIM}/RST/CLK/DAT, NC=1V_{SIM}/1RST/1CLK/1DAT, NO=2V_{SIM}/2RST/2CLK/2DAT

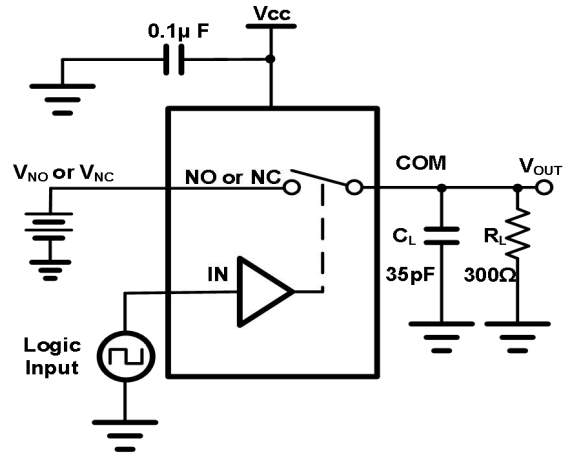

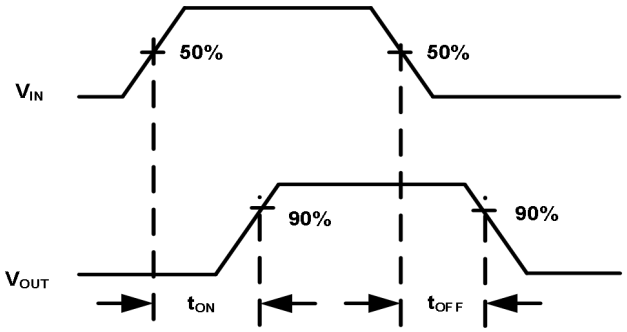

Fig.9-1. Switching Time

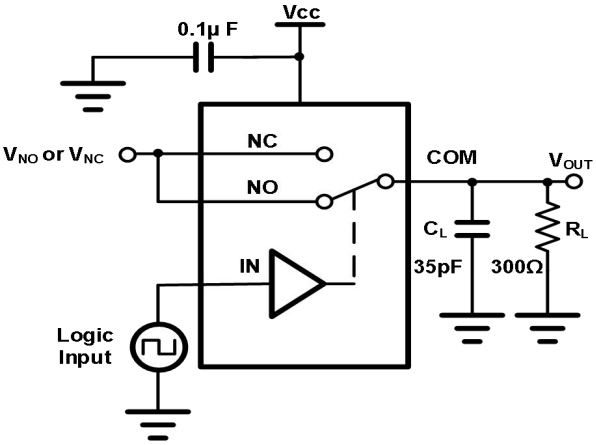

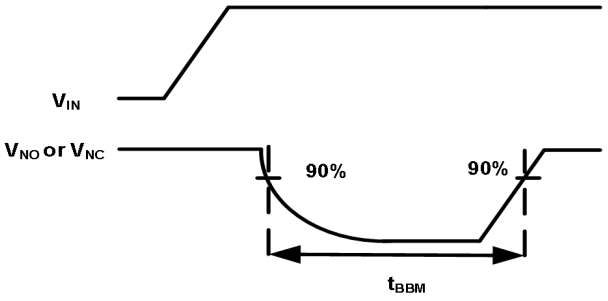

Fig.9-2. Break-Before-Make Interval

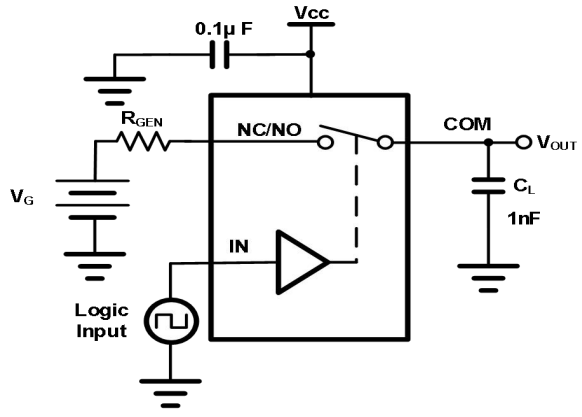

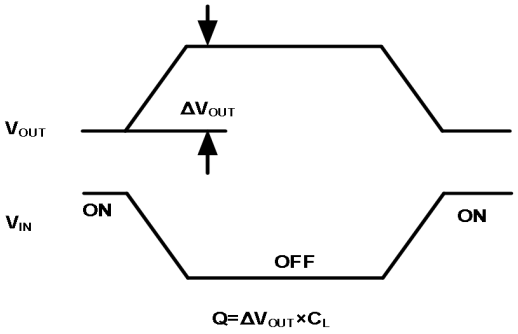

Fig.9-3. Charge Injection

9 Measurement Information(Continued)

COM=V_{SIM}/RST/CLK/DAT, NC=1V_{SIM}/1RST/1CLK/1DAT, NO=2V_{SIM}/2RST/2CLK/2DAT

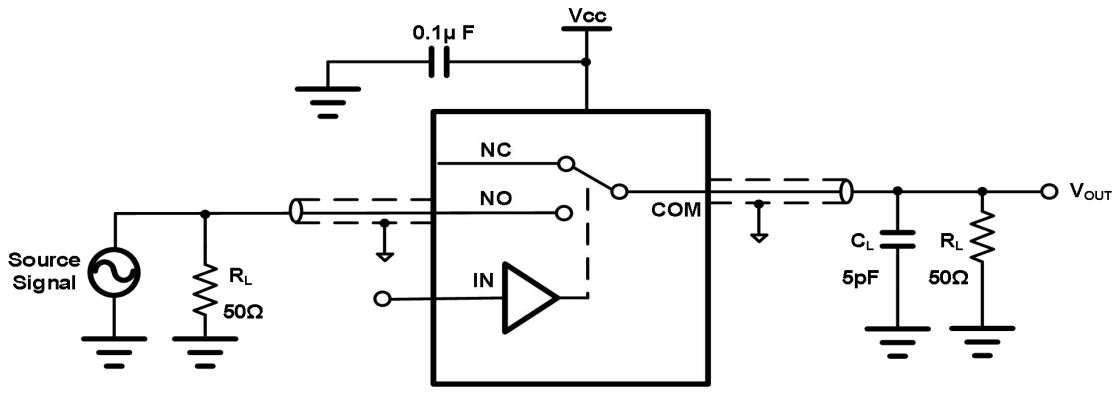

Fig.9-4. Off Isolation

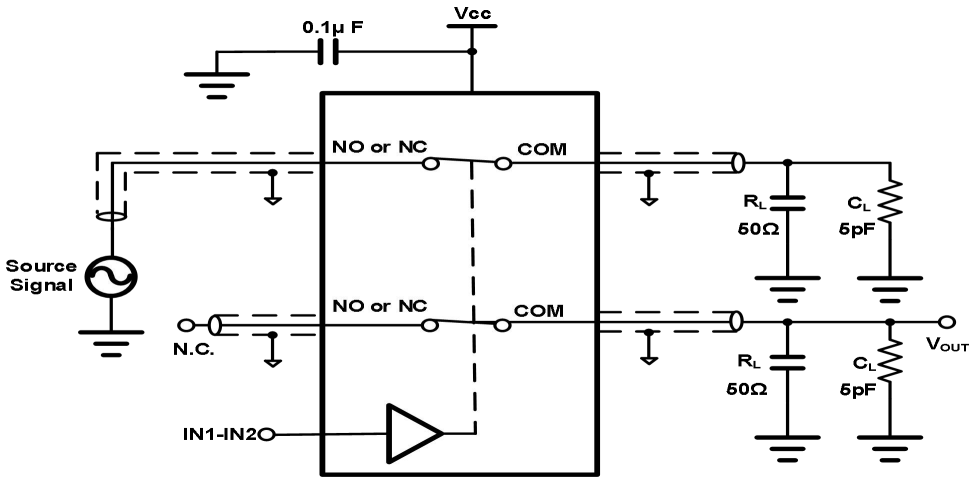

Channel To Channel Crosstalk=-20×log$\frac{V_{NO\ or\ V_{NC}}}{V_{OUT}}$

Fig.9-5. Channel To Channel Crosstalk

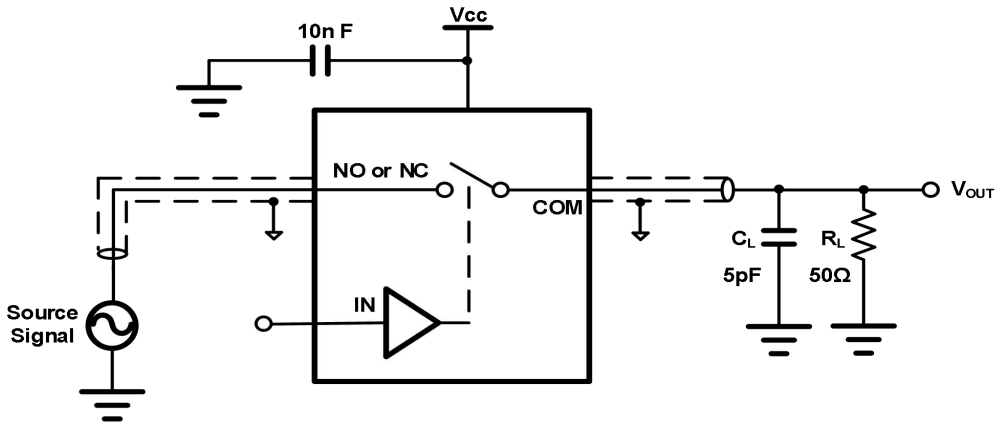

Fig.9-6. -3dB Bandwidth

10 Package Outline Dimension

QFN3×3-16L

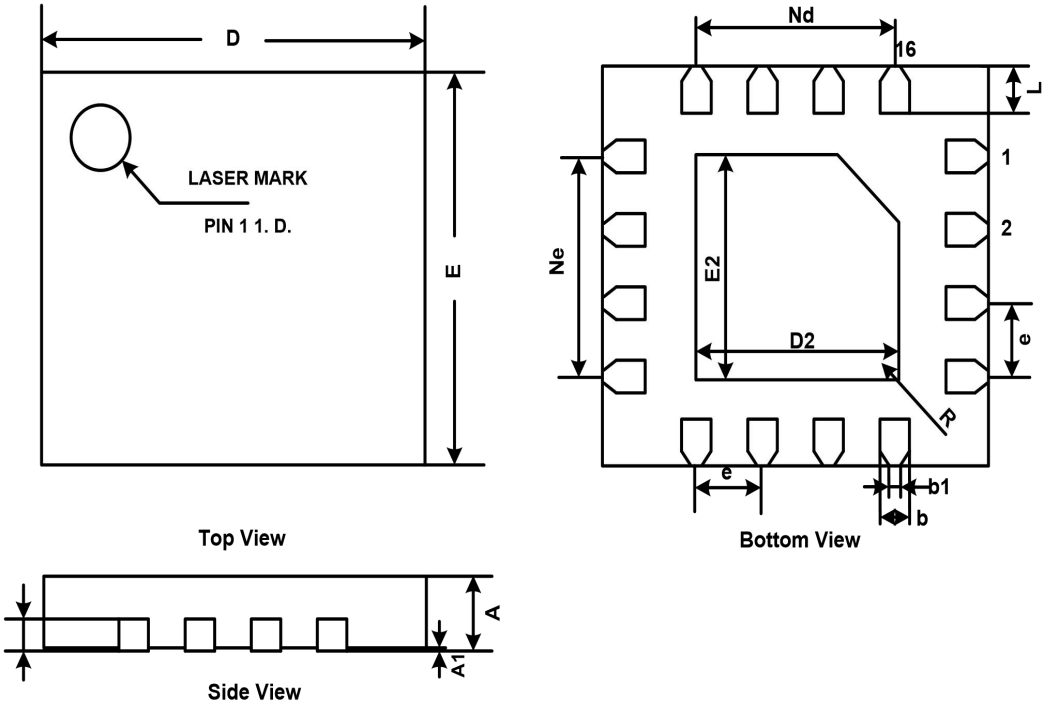

Symbol	Dimensions In Millimeters		Dimensions In Inches	
	Min	Max	Min	Min
A	0.700	0.800	0.028	0.032
A1	0.000	0.050	0.000	0.002
b	0.200	0.300	0.008	0.012
b1	0.230REF		0.009REF	
c	0.203REF		0.008REF	
D	2.900	3.100	0.116	0.124
D2	1.600	1.700	0.064	0.068
e	0.500BSC		0.020BSC	
Nd	1.500BSC		0.060BSC	
Ne	1.500BSC		0.060BSC	
E	2.900	3.100	0.116	0.124
E2	1.600	1.700	0.064	0.068
L	0.350	0.450	0.014	0.018
h	0.250	0.350	0.010	0.014
K	0.225	0.325	0.009	0.013
R	0.075REF		0.003REF	

10 Package Outline Dimension(Continued)

UTQFN1.8×2.6-16L

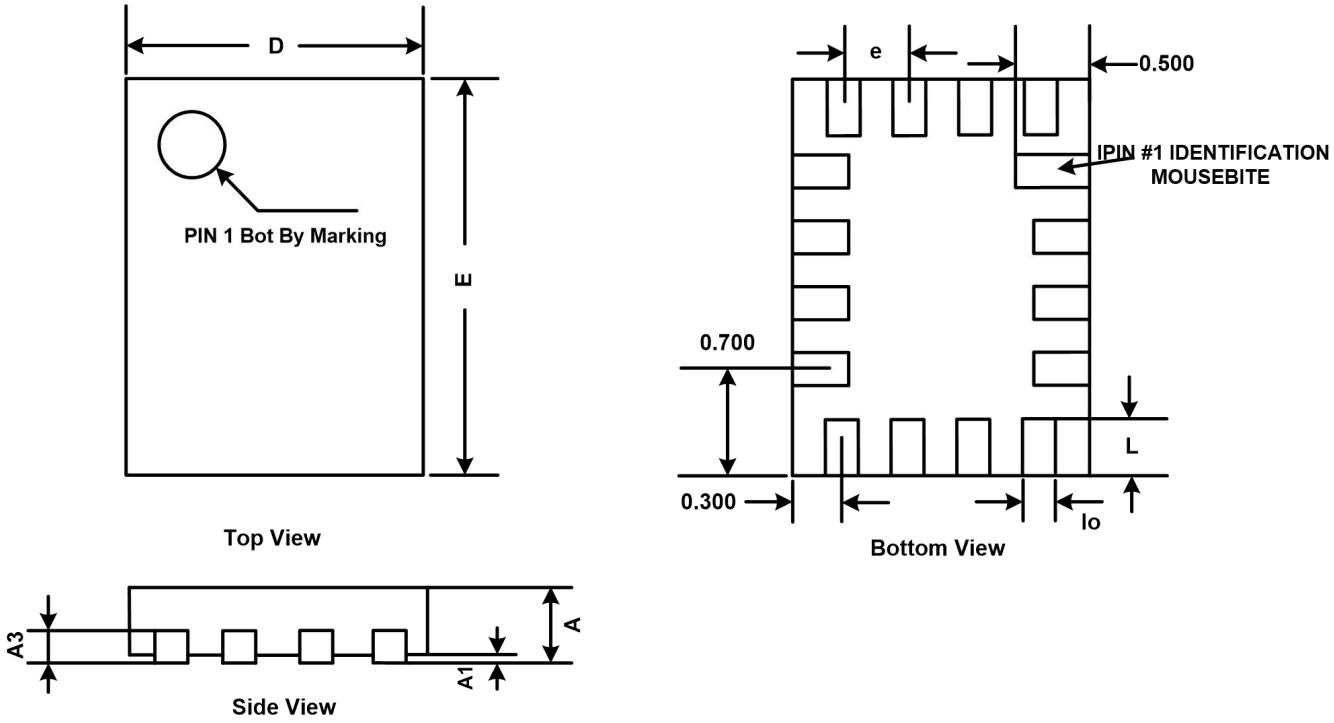

Symbol	Dimensions In Millimeters			Dimensions In Inches		
	Min	Nom	Max	Min	Nom	Max
A	>0.50	0.55	0.60	>0.19	0.21	0.23
A1	0.00	-	0.05	0.00	-	0.02
A3	0.15REF			0.06REF		
D	1.75	1.80	1.85	0.68	0.70	0.72
E	2.55	2.60	2.65	0.99	1.01	1.03
L	0.30	0.40	0.50	0.12	0.16	0.19
lo	0.15	0.20	0.25	0.06	0.08	0.10
e	0.40BSC			0.16BSC		

12 Tape and Reel Information

Reel Dimensions **Reel Dimensions**

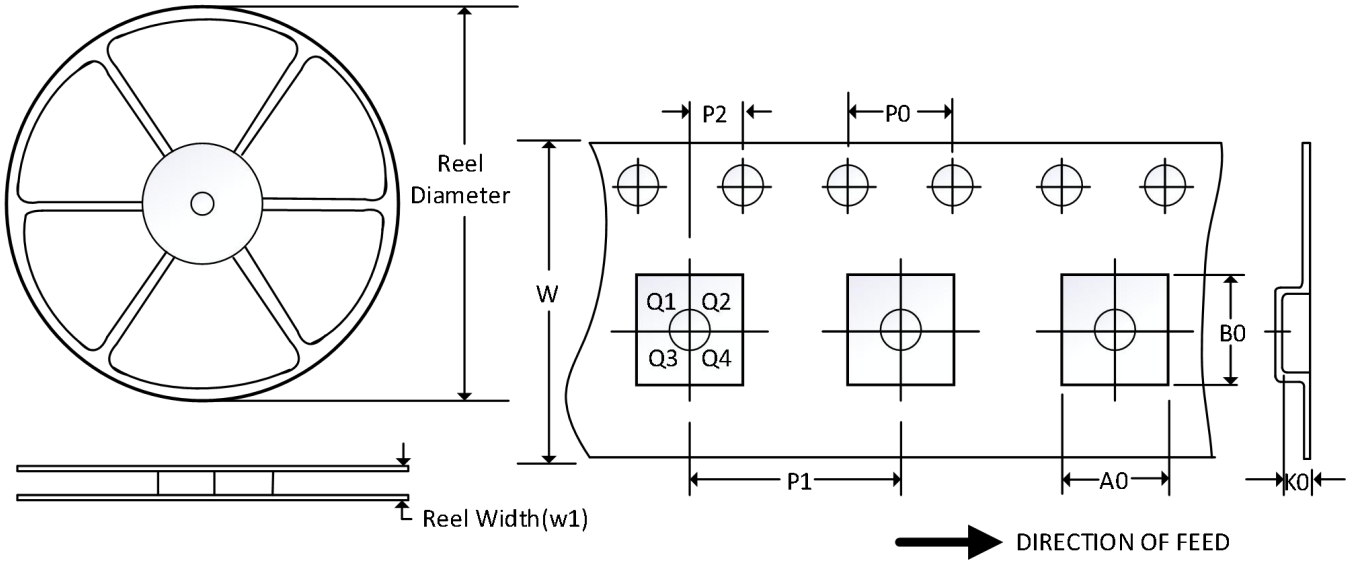

NOTE: The picture is only for reference. Please make the object as the standard.

Key Parameter List of Tape and Reel

Package Type	Reel Diameter	Reel Width (mm)	A0 (mm)	B0 (mm)	K0 (mm)	P0 (mm)	P1 (mm)	P2 (mm)	W (mm)	Pin1 Quadrant
QFN3×3-16L	178mm	12	3.23	3.23	1.05	4	4	2	12	Q1
UTQFN1.8×2.6-16L	178mm	9.04	2.1	2.9	0.75	4	4	2	8	Q1

NOTE:
1. All dimensions are nominal.
2. Plastic or metal protrusions of 0.15mm maximum per side are not included.