序号	品名	材质
1	端子	Phosphor Bronze Bright tin plated

REV.	DESCRIPTION	ECN NO.	NAME	DATE

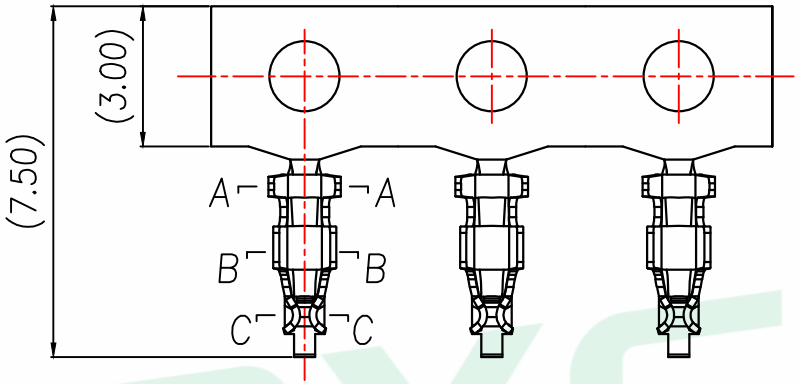

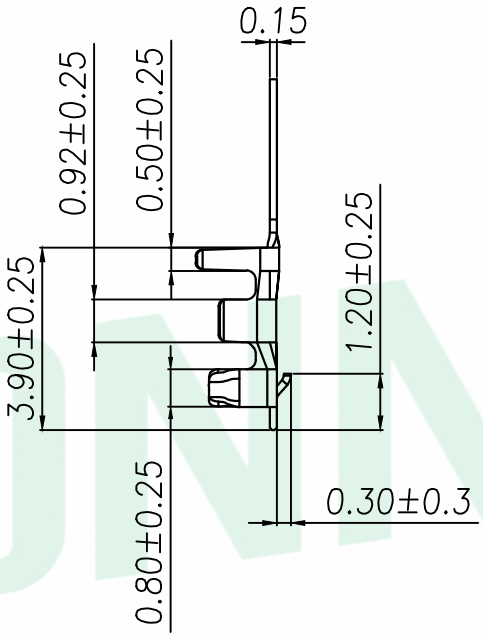

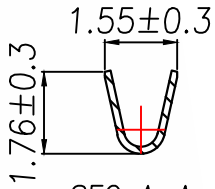

SEC A–A

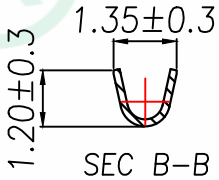

SEC B–B

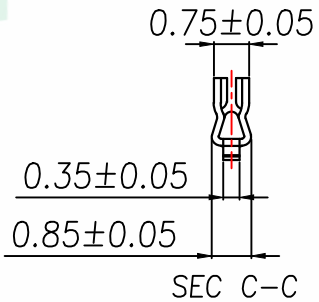

SEC C–C

技术指标(Technical Index):

1.工作温度(Temperature range):−25°C~+85°C.

2.额定电压(Rated voltage):150V DC/AC.

3.额定电流(Rated current):1.0A.

4.接触电阻(Contact resistance):
≤20mΩ(Initial) per contact,
≤40mΩ Change allowed.

5.耐压值(Dielectricwithstanding voltage):500V AC/minute.

6.绝缘电阻(Insulation resistance):≥500MΩ.

7.适用线规(Apply to gauge):AWG#26~AWG#30.(O.D 1.0mm Max)

GENERAL TOLERANCE							
DIM.	TOL.	DONGGUAN BAOXUN PRECISION TECHNOLOGY CO., LTD					BXCONN®
x.	±0.30	TITLE: 1.25 Pitch A型(DF13) 双排 公头端子					
x.x	±0.25						
x.xx	±0.15						
GENERAL ANGLE:		DWG. NO.: WF−1C125D				CHECKED: MAX	
X.°	±5°						
X.X°	±1°	PART NO.: WF−1C125D				DRAWN: ELLA	
		UNIT: mm	SCALE: none	SHEET: 1of 1	DWG. SIZE: A4	LAYER: bxconn	APPROVED: WILL