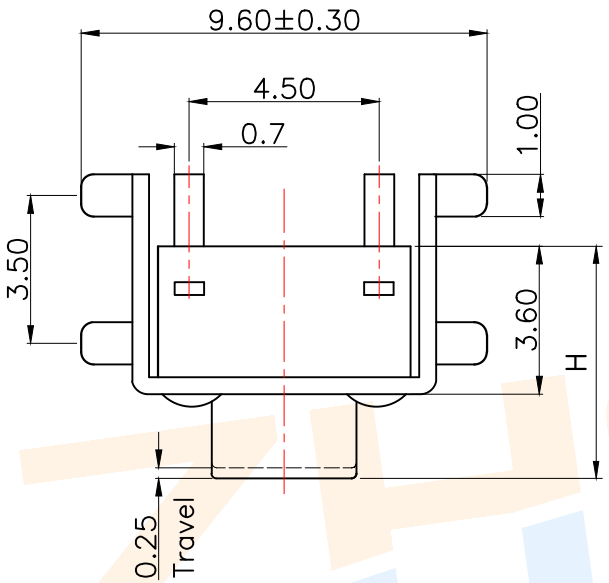
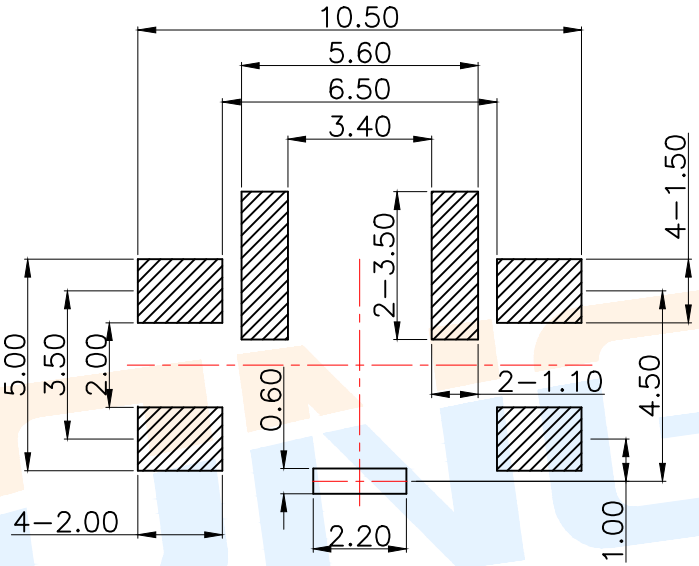
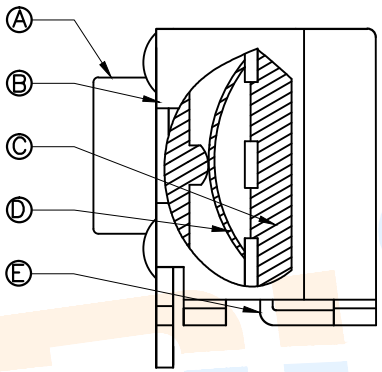
RoHS

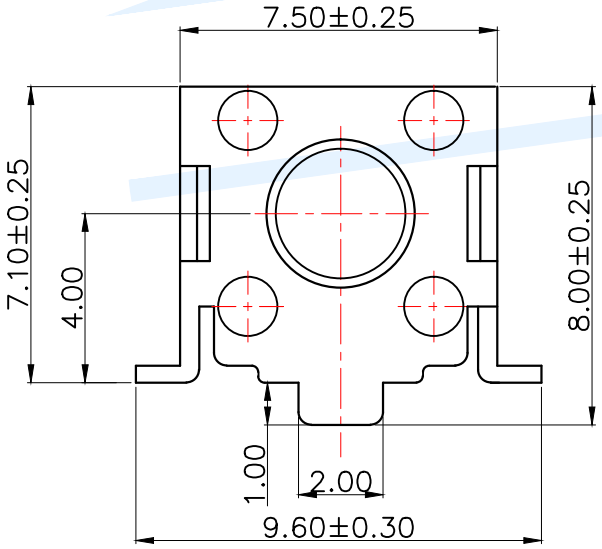


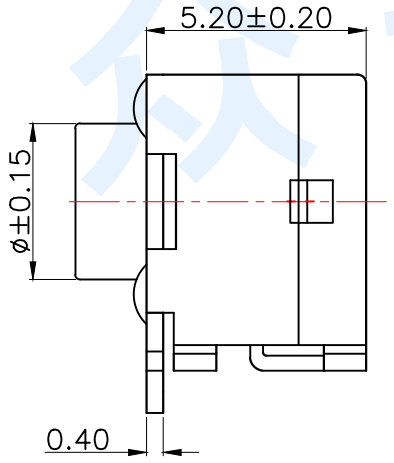


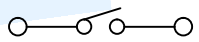
PCB Layout(Pattern side)



TOTAL HEIGHT					
Code	H	ø	Code	H	ø
043	4.3	3.45	075	7.5	3.1
045	4.5	3.45	080	8.0	3.1
050	5.0	3.45	085	8.5	3.1
055	5.5	3.3	090	9.0	3.1
060	6.0	3.3	095	9.5	3.1
065	6.5	3.1	100	10	3.1
070	7.0	3.1	105	10.5	3.0







Circuit Diagram

Product No.: TS-045AD-□□-□□

型号:

产品高度(H):
043=4.3mm
045=4.5mm
050=5.0mm

操作力度:
120=120gf±50gf
180=180gf±50gf
250=250gf±50gf

:弹片
D2=SUS/1PCS

:包装方式
-P=编带(非编带,不启用)

NO.	Name	Number	Qty	Materil	Remarks
Ⓔ	Terminal		2	Brass	Silvering
Ⓓ	Reed		1	Phosphorus copper	Silver Covered
Ⓒ	Button		1	PPA	Black
Ⓑ	Cover		1	SPCC	Plating Cu Sn
Ⓐ	Base		1	PPA	Black

ZHONGDI® 众迪 Zhongdi Electronic Technology Co., Ltd

									angle	±2°		design		date		name	TACT SWITCHS
									10~30	±0.30		Review		date			
									5~10	±0.20		Approved		date		model	TS-045AD-□□-D□
									~ 5	±0.10	Drawing number:						
				modify		Review		Approved	Tolerance not specified		Proportion	1:1	unit	mm	gape number		A4

项　目 Item	技术参数 Technical Parameter	标　准 Standard
电气性能 Electrical Properties	额定电流 Rated Current:	50mA
	额定电压 Rated voltage:	DC 12V
	接触电阻 Contact resistance:	≤100mΩ
	绝缘电阻 Insulation Resistance:	DC 250V 1 min ≥100MΩ
	耐压强度 Compressive strength:	AC 250V 50Hz/1 min
机械 性能 Mechanical Properties	机械寿命 Mechanical life:	100,000 cycles Min
	操作行程 Operation Stroke:	0.25±0.10mm
环境性能 Environmental	工作温度 Operation temperature:	-25℃～ +75℃
	使用湿度 Use humidity:	≤85% RH
可靠性特性 Reliability Characteristics	回流焊 Reflow Soldering:	≤260℃ 时间 Time 3s
	波峰焊 Wave soldering:	≤260℃ 时间 Time 3s
	手工焊 Manual welding:	≥260℃ 时间 Time 3s
应用领域 Application area	影音产品、电子玩具、数码产品、通讯产品、安防产品等. Audiovisual products, electronic toys, digital products, communication products, security products, etc	



绝缘电阻测量仪



直流低电阻测试仪



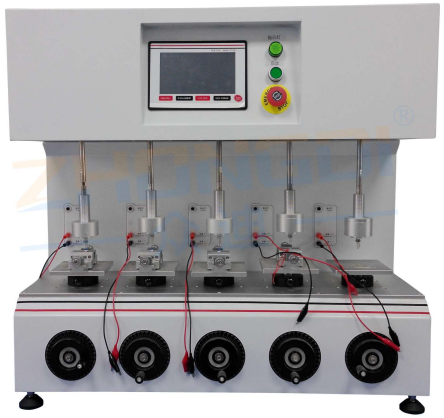
耐电压测试仪



回流焊机



二次元测量仪



高精密寿命测试仪



盐雾测试仪



按键荷重曲线仪

ZHONGDI® 众迪 Zhongdi Electronic Technology Co., Ltd

| | | |