ORDER NO.	WOODHEAD NO.	COLOR
130147-0029	26W76	YELLOW
130147-0030	26W76BLK	BLACK
130147-0464	26W76-ICE	BLUE

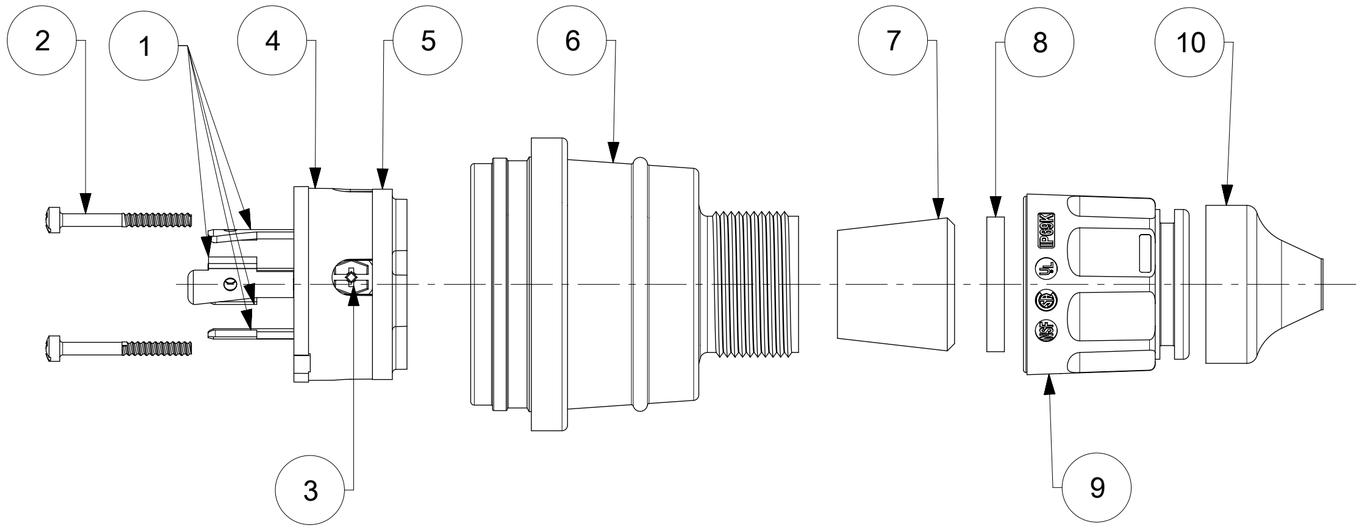

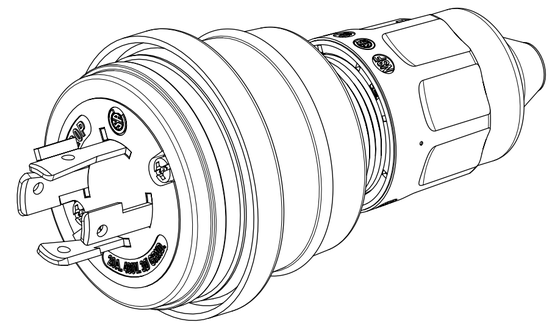

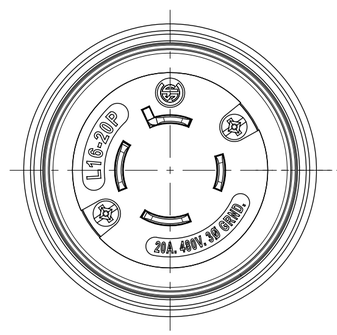

FACE VIEW

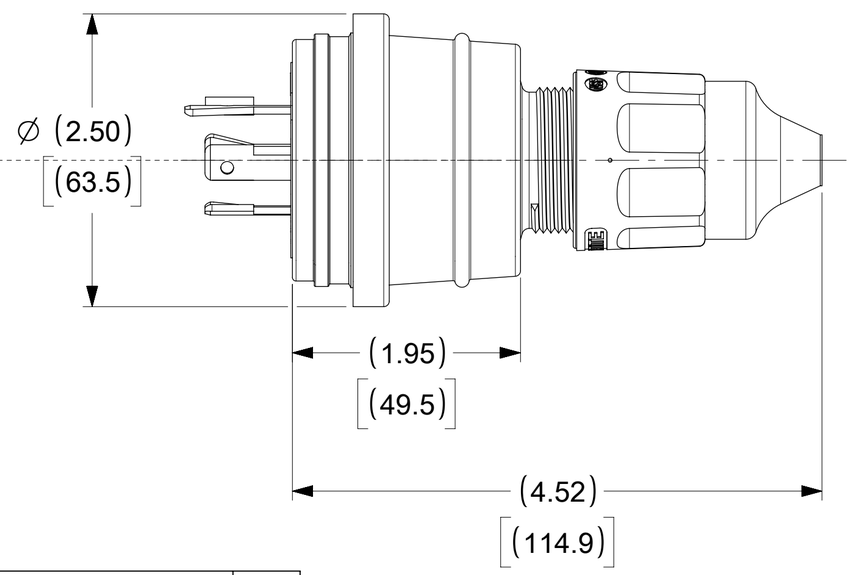

ITEM NO.	DESCRIPTIONS	MATERIAL	QTY.
1	BLADE	BRASS, NICKEL PLATED	4
2	RETAINING SCREWS	STAINLESS STEEL	2
3	CLAMP AND TERMINAL SCREW ASSY	BRASS, ZINC PLATED	4
4	INSERT	NYLON	1
5	TERMINAL COVER	POLYCARBONATE	1
6	HOUSING	SILICON WITH NYLON THREAD	1
7	GROMMET	RUBBER	4
8	FRICTION RING	NYLON	1
9	COMPRESSION NUT	NYLON	1
10	CABLE GLOVE	SILICONE	1

NOTE:
1. ACCEPT CABLE RANGE FROM .437" TO .750"

DOCUMENT STATUS	P1	RELEASE DATE	2022/03/15 02:28:08

FUNCTIONAL SYMBOLS: FA = 0, FC = 0, FP = 0

DIVISIONAL SYMBOLS

THIS DRAWING CONTAINS INFORMATION THAT IS PROPRIETARY TO MOLEX ELECTRONIC TECHNOLOGIES, LLC AND SHOULD NOT BE USED WITHOUT WRITTEN PERMISSION

DIMENSION UNITS: INCH
SCALE: NTS

GENERAL TOLERANCES (UNLESS SPECIFIED)

	MM	INCH
4 PLACES	±	±
3 PLACES	±	±
2 PLACES	±	±
1 PLACE	±	±
0 PLACES	±	±
ANGULAR TOL	± °	

DRAFT WHERE APPLICABLE MUST REMAIN WITHIN DIMENSIONS

CURRENT REV DESC: ADDED 130147-0464 TO THE TABLE.

EC NO: 695188
DRWN: DNGUYEN62 2022/02/09
CHK'D: WLEUNG 2022/02/15
APPR: JFMURPHY 2022/03/15

INITIAL REVISION:
DRWN: DRAWN BY 0099/99/99
APPR: APPR BY 0099/99/99

THIRD ANGLE PROJECTION

DRAWING: C-SIZE
SERIES: 130147

molex

WATERTITE PLUG 3P4W L16-20

PRODUCT CUSTOMER DRAWING

DOCUMENT NUMBER	DOC TYPE	DOC PART	REVISION
1301470029	PSD	000	B

MATERIAL NUMBER	CUSTOMER	SHEET NUMBER
SEE TABLE	GENERAL MARKET	1 OF 1