REV.	ECN NO.	REVISIONS	DRN.	CKD.	APP.	DATE
A	——	NEW RELEASE	DC			

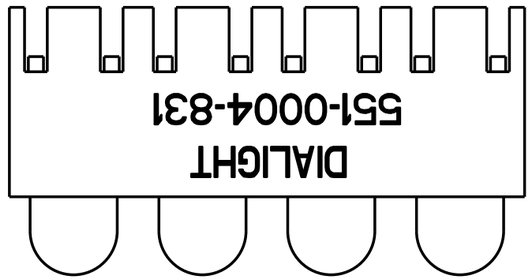

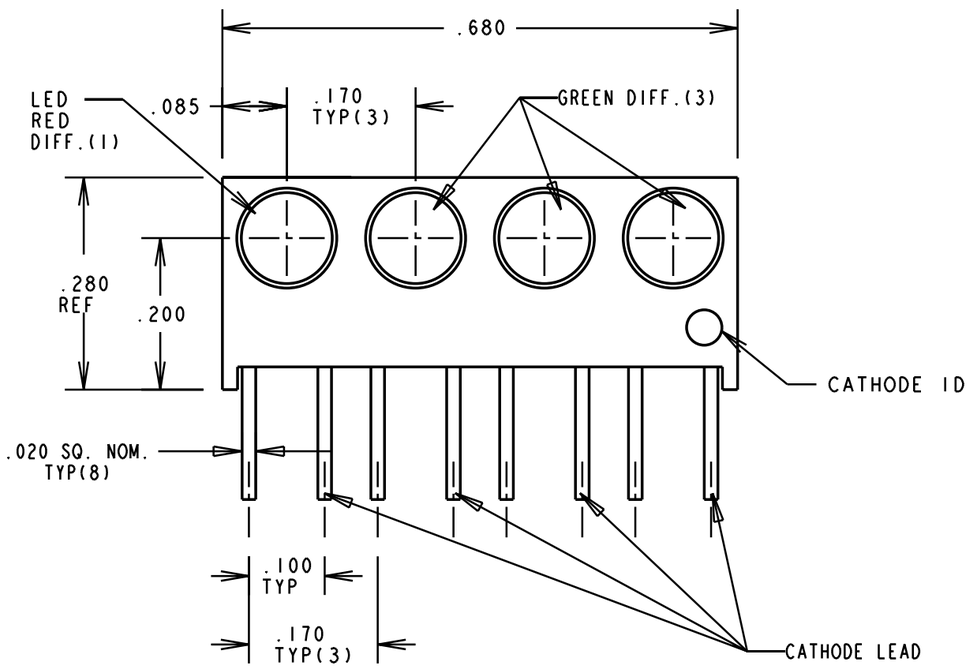

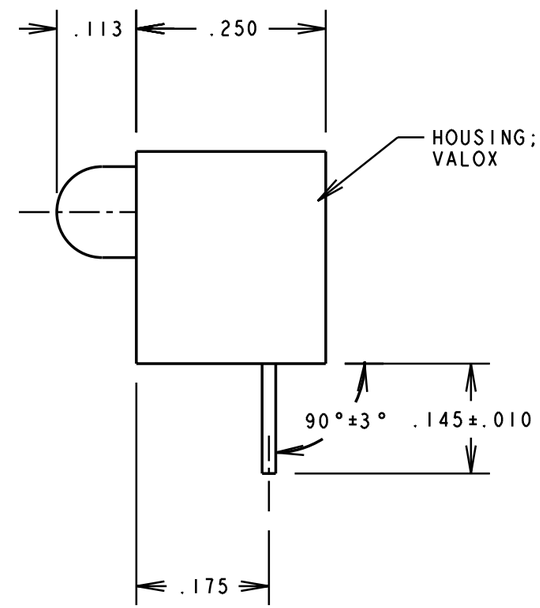

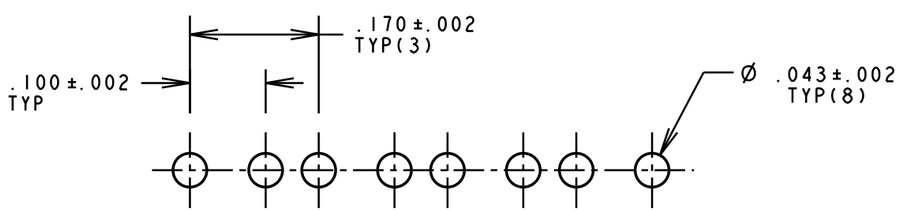

RECOMMENDED PC BOARD HOLE PATTERN

OPERATING CHARACTERISTICS AT T_A = 25 °C

SYMBOL	PARAMETER	COLOR	MIN	TYP	MAX	UNITS	TEST COND.
V_F	FORWARD VOLTAGE	RED		2.0	3.0	V	I_F = 10mA
		GREEN		2.1	3.0		
V_R	REVERSE VOLTAGE	ALL	3			V	I_R = 10µA
λ_{PK}	PEAK WAVELENGTH	RED		650		nm	
		GREEN		563			
I_V	LUMINOUS INTENSITY	RED	3.6	10		mcd	I_F = 10mA
		GREEN	5.6	16.0			

NOTES:
1. LEADS TO FIT INTO HOLES SPACED AS PER HOLE PATTERN.
2. LED LEAD DIMENSIONS SHOWN ARE MEASURED AT HOUSING EXIT.
3. DIALIGHT PART NUMBER: 551-0004-831.

THIS DRAWING AND THE CONTENTS HEREIN ARE CONFIDENTIAL AND THE SOLE PROPERTY OF DIALIGHT. REPRODUCTION OF THIS DRAWING OR CONSTRUCTION OF ANY PARTS WITHIN THIS DRAWING ARE FORBIDDEN WITHOUT THE WRITTEN CONSENT OF DIALIGHT.

SCALE 5:1
ALL DIM'S IN: INCHES
TOLERANCES:
UNLESS OTHERWISE SPECIFIED
FRACTIONS: ±1/64
DECIMALS (.XX): ±.020
DECIMALS (.XXX): ±.015
ANGLES: ±3°
FINISH:
FSCM 83330

DRAWING NUMBER C-16560
REV A
TITLE 3mm QUAD LED CBI
MATERIAL

Dialight
1913 ATLANTIC AVE.
MANASQUAN, N.J. 08736

SHEET OF
FAMILY TABLE: