1 FEATURES

- It can be powered by a 3V to 5.5V V_{CC} supply
- Operates up to 1Mbps
- Two Drivers and Two Receivers
- Meets the Requirements of TIA/EIA-232-F and ITU V.28 standard
- External Capacitors: 4 x 0.1μF
- Serial pins provide enhanced ESD protection

2 APPLICATIONS

- Industrial PC
- Wired network
- Data center and enterprise computing
- Notebook, Computers
- Handheld device

3 DESCRIPTION

The GM3232H interface chip consists of two-channel drivers, two-channel receivers, and a dual charge-pump circuit. The serial port has ±15kV IEC ESD protection. The GM3232H meets the requirements of TIA/EIA-232-F and provides the electrical interface function between an asynchronous communication controller and a serial-port connector. The internal charge pump of the chip and four small external capacitors support a single power supply of 3V to 5.5V. The GM3232H supports a data signaling rate of up to 1Mbit/s.

FUNCTION BLOCK

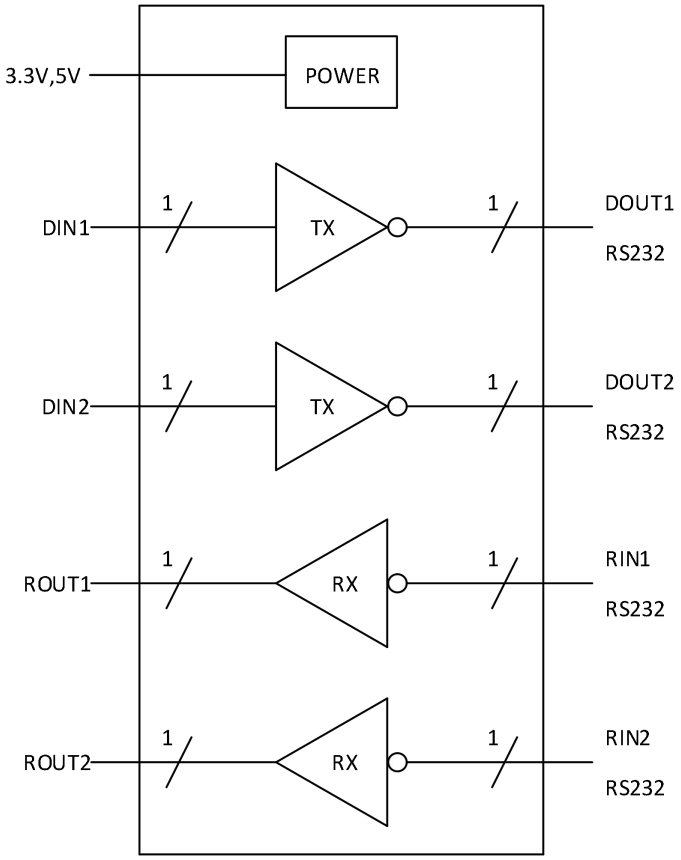

Copyright © GATEMODE Corp.
Tel: (+86) 13135660803
Email: sales@gmmicro.com

4 Pin Configuration and Functions

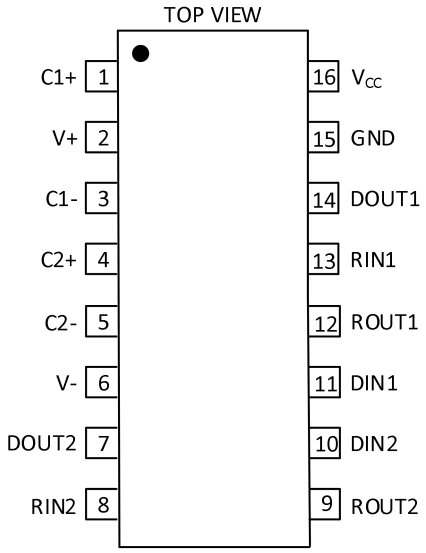

Name	Pin No.	Description
C1+	1	The positive end of the voltage doubler charge pump capacitor
V+	2	Positive voltage produced by charge pump
C1-	3	The negative end of the voltage doubler charge pump capacitor
C2+	4	The positive end of the inverting charge pump capacitor
C2-	5	The negative end of the inverting charge pump capacitance
V-	6	Negative voltage generated by charge pump
DOUT2	7	RS-232 driver output
RIN2	8	RS-232 receiver input
ROUT2	9	TTL/CMOS receiver output
DIN2	10	TTL/CMOS driver input
DIN1	11	TTL/CMOS driver input
ROUT1	12	TTL/CMOS receiver output
RIN1	13	RS-232 receiver input
DOUT1	14	RS-232 driver output
GND	15	Ground
V_{CC}	16	+3.0V to +5.5V power supply

Copyright © GATEMODE Corp.
Tel: (+86) 13135660803
Email: sales@gmmicro.com

5 ABSOLUTE MAXIMUM RATINGS

SYMBOL	Parameter	Rating	UNIT
V_{CC}	Supply Voltage	+6	V
V+	Positive Output Supply Voltage(1)	-0.3 to +7	V
V-	Negative Output Supply Voltage(1)	-0.3 to -7	V
V+~V-	Supply Voltage Difference(1)	+13	V
Driver input	Input Voltage	-0.3 to +6	V
Receiver input		-25 to 25	V
Driver output	Output Voltage	-13.2 to 13.2	V
Receiver output		-0.3 to V_{CC}+0.3	V

1：V+ and V- can reach the maximum voltage value of 7V, but the difference between them cannot exceed 13V.

6 RECOMMENDED APPLICATION CONDITIONS(2)

Parameter		Condition		MIN	TYP	MAX	UNIT
V_{CC}	Supply Voltage	V_{CC}=3.3V		3	3.3	3.6	V
		V_{CC}=5V		4.5	5	5.5	V
V_{IHx}	Supply Voltage	DIN	V_{CC}=3.3V	2.0		5.5	V
			V_{CC}=5V	2.4		5.5	V
V_{IH}	Driver Input High Voltage	DIN		0		0.8	V
V_I	Receiver Input Voltage	RIN		-25		25	V
T_{OP}	Operating Temperature			-40		+125	℃

2：C1-C4=0.1μF when V_{CC}=3.3V±0.3V; When V_{CC}=5V±0.5V, C1=0.047μF, C2-C4=0.33μF.

Copyright © GATEMODE Corp.
Tel: (+86) 13135660803
Email: sales@gmmicro.com

7 ELECTRICAL CHARACTERISTICS[3]

(unless otherwise noted, C1~C4 = 0.1μF at V_{CC} = 3.3V±0.3V; C1 = 0.047μF, C2~C4 = 0.33μF at V_{CC} = 5V±0.5V; T_A =+25°C.)

Symbol	Parameter	Condition	MIN	TYP	MAX	UNIT
DC ELECTRICAL CHARACTERISTIC						
I_{CC}	Supply Current	No load, V_{CC} = 3.3V or 5V		0.3	1.0	mA
Driver						
V_{OH}	High-Level Output Voltage	DOUT at R_L = 3kΩ to GND,DIN = GND	5	5.4		V
V_{OL}	Low-Level Output Voltage	DOUT at R_L = 3kΩ to GND,DIN = V_{CC}		-5.4	-5	
I_{IH}	High-Level Input Current	V_I = V_{CC}		±0.01	±1	μA
I_{IL}	Low-Level Input Current	V_I at GND		±0.01	±1	μA
I_{OS}	Short-Circuit Output Current	V_{CC} = 3.6V, V_O = 0V		±30	±60	mA
		V_{CC} = 5.5V, V_O = 0V				
r_o	Output Resistance	V_{CC}, V+, and V- = 0V, V_O = ±2V	300	10M		Ω
RECEIVER						
V_{OH}	High-Level Output Voltage	I_{OH}=-1mA	V_{CC}-0.6	V_{CC}-0.1		V
V_{OL}	Low-Level Output Voltage	I_{OL}=1.6mA		0.1	0.4	mV
V_{IT+}	Positive-Going Input Threshold Voltage	V_{CC}=3.3V		1.4	2.4	V
		V_{CC}=5V		1.7	2.4	
V_{IT-}	Negative-Going Input Threshold Voltage	V_{CC}=3.3V	0.6	1.1		V
		V_{CC}=5V	0.8	1.3		
V_{hys}	Input Hysteresis (V_{IT+}–V_{IT-})			0.4		V
r_i	Input Resistance	V_I = ±3V to ±25V	3	6	8	kΩ
ESD ELECTROSTATIC PROTECTION						
$V_{(ESD)}$	Electrostatic Protection (232 pin)	Human Body Model		±15		kV
		Machine Mode		±800		V
		Contact Discharge IEC 61000-4-2		±10		kV
		Air Discharge IEC 61000-4-2		±15		kV
$V_{(ESD)}$	Electrostatic Protection (other pins)	Human Body Model		±4		kV
		Machine Mode		±400		V

3：Typical Test conditions are at V_{CC}=3.3V or V_{CC}=5V，T_A=25°C.

8 SWITCHING CHARACTERISTICS

(unless otherwise noted, C1–C4 = 0.1μF at V_{CC} = 3.3V±0.3V; C1 = 0.047μF, C2–C4 = 0.33μF at V_{CC} = 5V±0.5V; T_A = +25°C.)

Symbol	Parameter	Condition		MIN	TYP	MAX	UNIT
F_{MAX}	Maximum Data Rate	R_L=3kΩ，C_L=1000pF, see Figure 1			1	2	Mbps
$T_{sk(p)}$	Driver pulse skew	R_L = 5kΩ, C_L = 1000pF, see Figure 2			160		ns
$SR_{(TR)}$	Driver slew rate, transition region	R_L = 3kΩ to 7kΩ, V_{CC} = 3.3V	C_L = 150pF to 1000pF	14		150	V/μs
T_{PLH}	Receiver propagation delay time, low- to high-level output	C_L = 150pF, see Figure 3			30		ns
T_{PHL}	Receiver propagation delay time, high- to low-level output				30		ns
$T_{sk(p)}$	Receiver pulse skew				10		ns

Copyright © GATEMODE Corp.
Tel: (+86) 13135660803
Email: sales@gmmicro.com

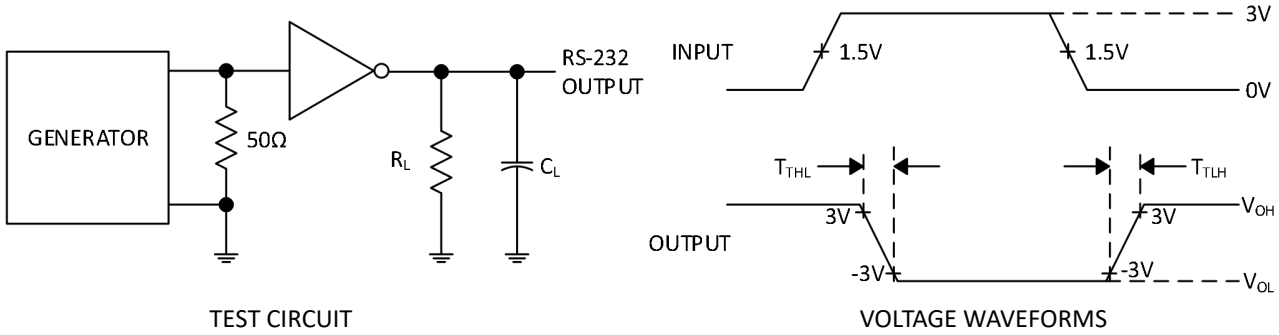

Figure 1.Driver Skew Rate

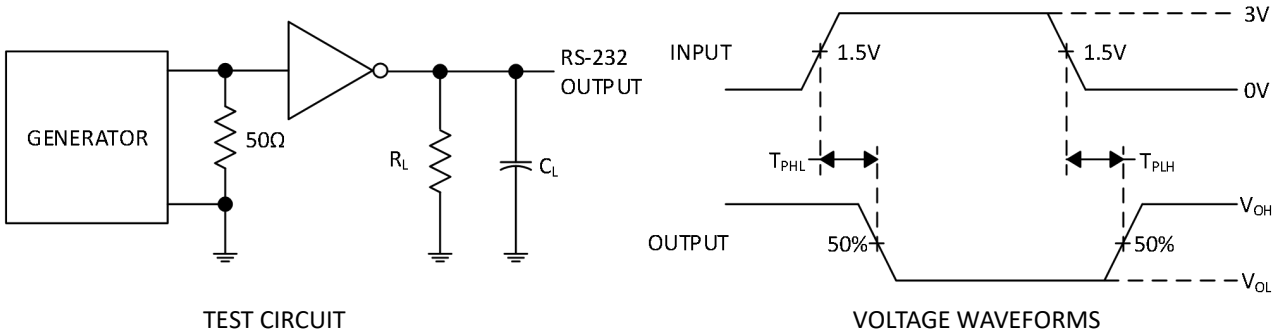

Figure 2. Driver Pulse Skew

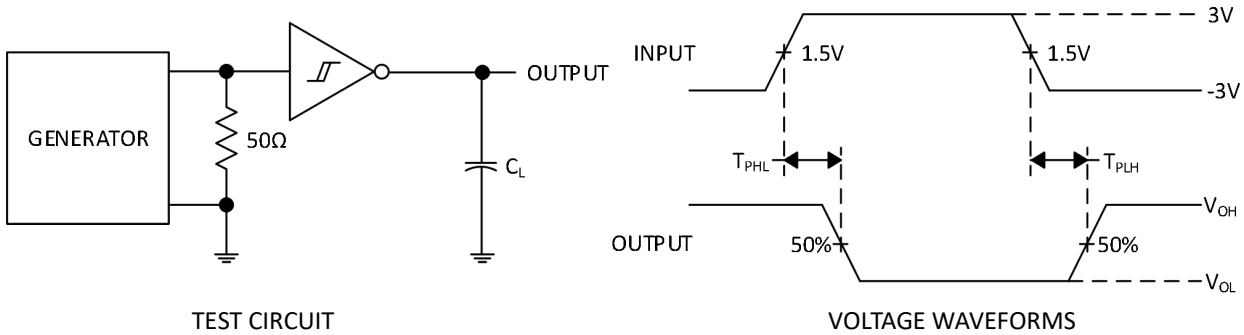

Figure 3. Receiver Propagation Delay Times

9 TYPICAL OPERATING CHARACTERISTICS

9.1 DESCRIPTION

The GM3232H interface chip comprises two drivers, two receivers, and a dual charge-pump circuit. The serial port has an ESD protection level of ±15kV according to IEC61000-4-2. The GM3232H meets the requirements of TIA/EIA-232-F and provides an electrical interface function between an asynchronous communication controller and a serial port connector. The internal charge pump of the chip and four small external capacitors support a single power supply ranging from 3V to 5.5V. The GM3232H supports a data signaling rate of up to 1Mbit/s, and the maximum slew rate of the driver output is 150V/µs. The output ports of the chip are equipped with short - circuit protection to ground.

9.2 POWER SUPPLY

The GM3232H internally integrates a dual charge-pump circuit to provide positive and negative voltages. The positive and negative voltages generated by the charge pump are available at the V+ and V- pins of the chip respectively. This charge pump requires four off-chip capacitors to operate properly.

9.3 RS232 DRIVER

When the input level of the driver, DIN, is a valid high or low level, the driver will convert the TTL/CMOS standard logic level into the RS232 level that meets the requirements of TIA/EIA-232-F.

Copyright © GATEMODE Corp.

9.4 RS232 RECEIVER

The two receivers of GM3232H can convert the RS232 level into the standard logic output level. If the receiver input is open-circuit, the receiver output ROUT is at a high level. The input terminal RIN of each receiver has a standard built-in RS232 load.

9.5 RS232 LOGICAL FUNCTION TABLE

The logic function tables of the driver and receiver of GM3232H are shown in Table 1 and Table 2 below (H=High level, L=Low level, Open=Input open circuit).

Table 1: Drive logic function table

Driver	
Input DIN	**Output DOUT**
L	H
H	L

Table 2: Receiver logic function table

Receiver	
Input DIN	**Output DOUT**
L	H
H	L
Open	H

Copyright © GATEMODE Corp.
Tel: (+86) 13135660803
Email: sales@gmmicro.com

10 TYPICAL APPLICATION[4]

Figure 4 below shows a typical application of GM3232H. The ROUT and DIN pins are connected to the UART port or the common logic line, and the RIN and DOUT pins are connected to the RS232 connector port or the RS232 bus. In order to work properly, please refer to Table 3 to select the appropriate capacitor.

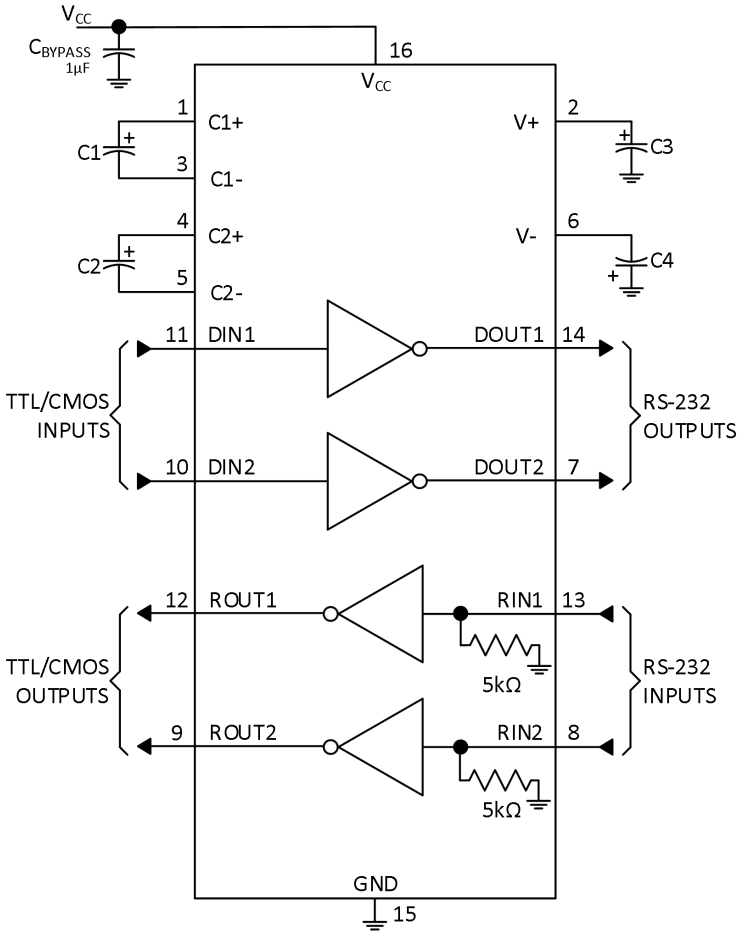

Figure 4.Typical Operating Circuit and Capacitor Values

4：Nonpolorized ceramic capacitors are acceptable. If polarized tantalum or electrolytic capacitors are used, they should be connected as shown.

Table 3. V_{CC} vs Capacitor Values

V_{CC}	C1	C2,C3,C4
3.3V±0.3V	0.1µF	0.1µF
5V±0.5V	0.047µF	0.33µF
3V to 5.5V	0.1µF	0.47µF

Copyright © GATEMODE Corp.
Tel: (+86) 13135660803
Email: sales@gmmicro.com

11 LAYOUT

Keep the external capacitor traces short. This is more important on C1 and C2 nodes that have the fastest rise and fall times.

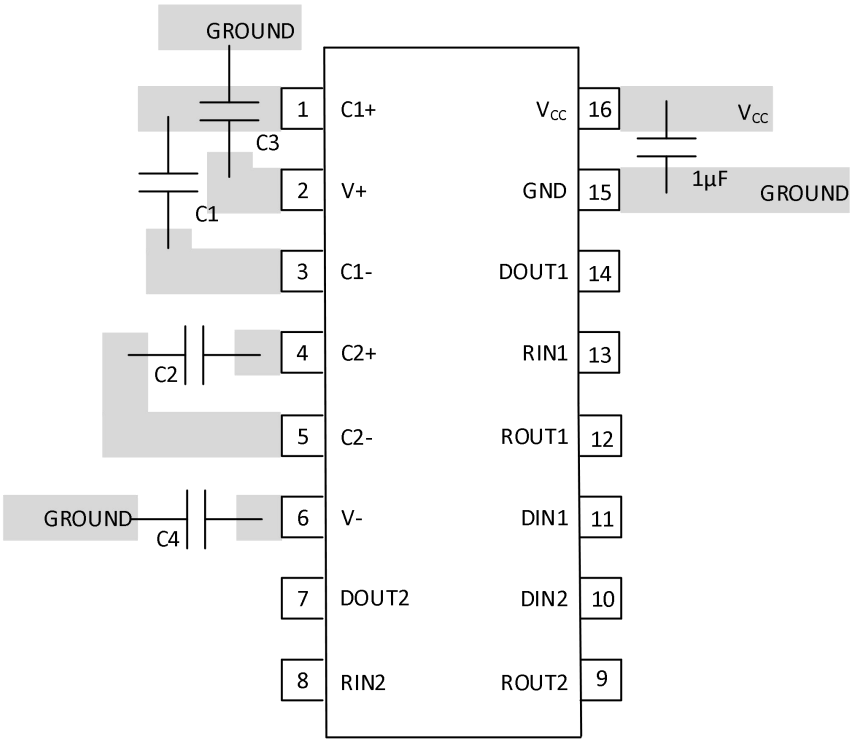

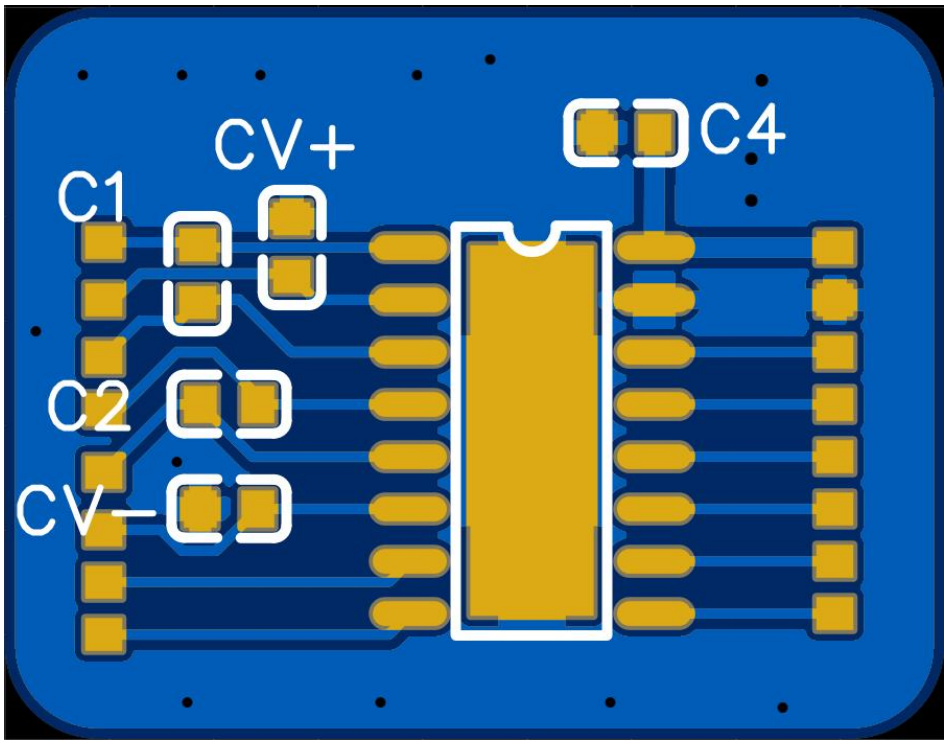

Figure 5. Layout Diagram

Copyright © GATEMODE Corp.

PACKAGE DIMENSION
SOP16

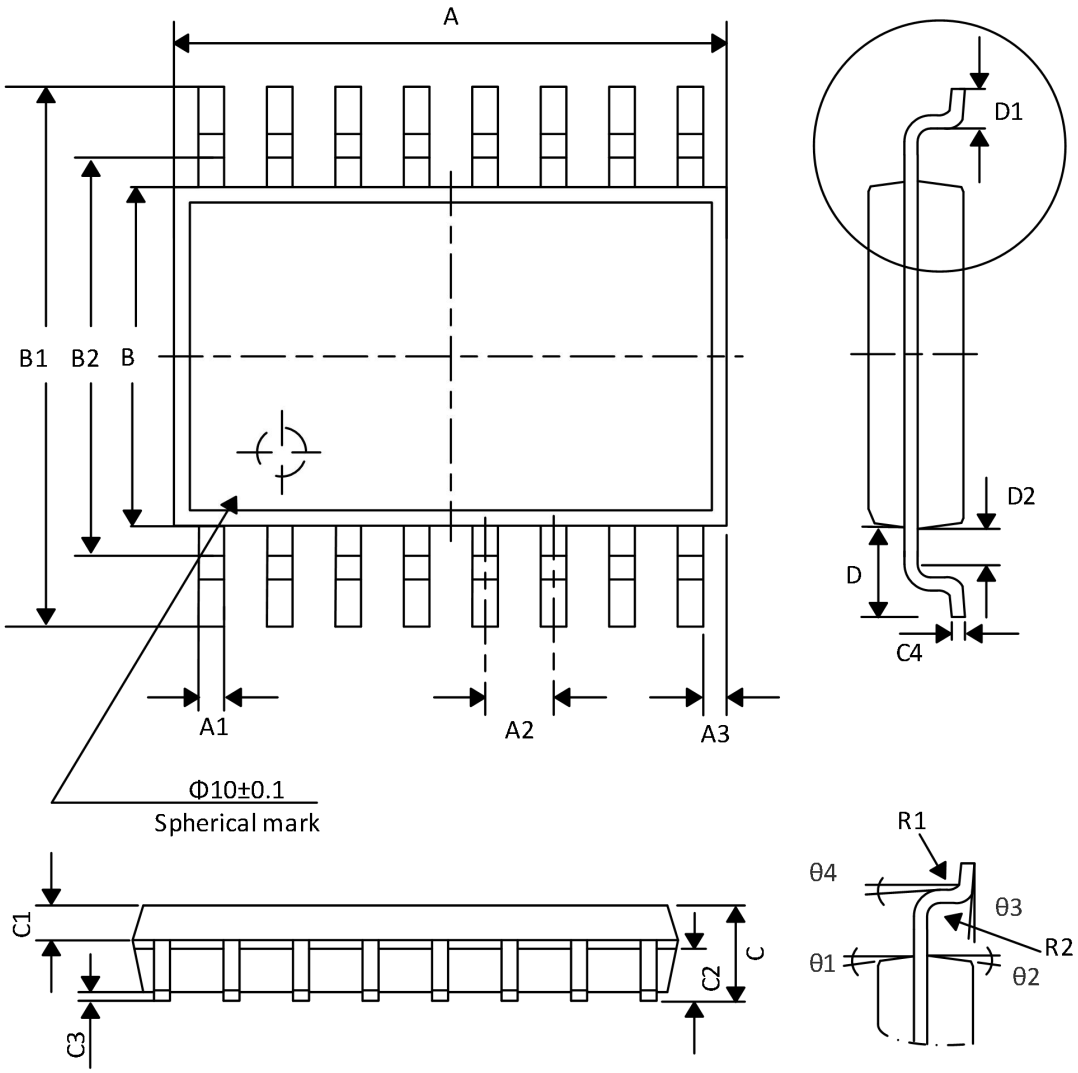

DIMENSION / SYMBOL	MIN (mm)	MAX (mm)	DIMENSION / SYMBOL	MIN (mm)	MAX (mm)
A	9.80	10.00	C4	0.203	0.233
A1	0.356	0.456	D	1.05TYP	
A2	1.27TYP		D1	0.40	0.70
A3	0.302TYP		D2	0.15	0.25
B	3.85	3.95	R1	0.20TYP	
B1	5.84	6.20	R2	0.20TYP	
B2	5.00TYP		θ1	8°~12°TYP4	
C	1.40	1.60	θ2	8°~12°TYP4	
C1	0.61	0.71	θ3	0°~8°	
C2	0.54	0.64	θ4	4°~12°	
C3	0.05	0.25			

Copyright © GATEMODE Corp.
Tel: (+86) 13135660803
Email: sales@gmmicro.com

TSSOP16

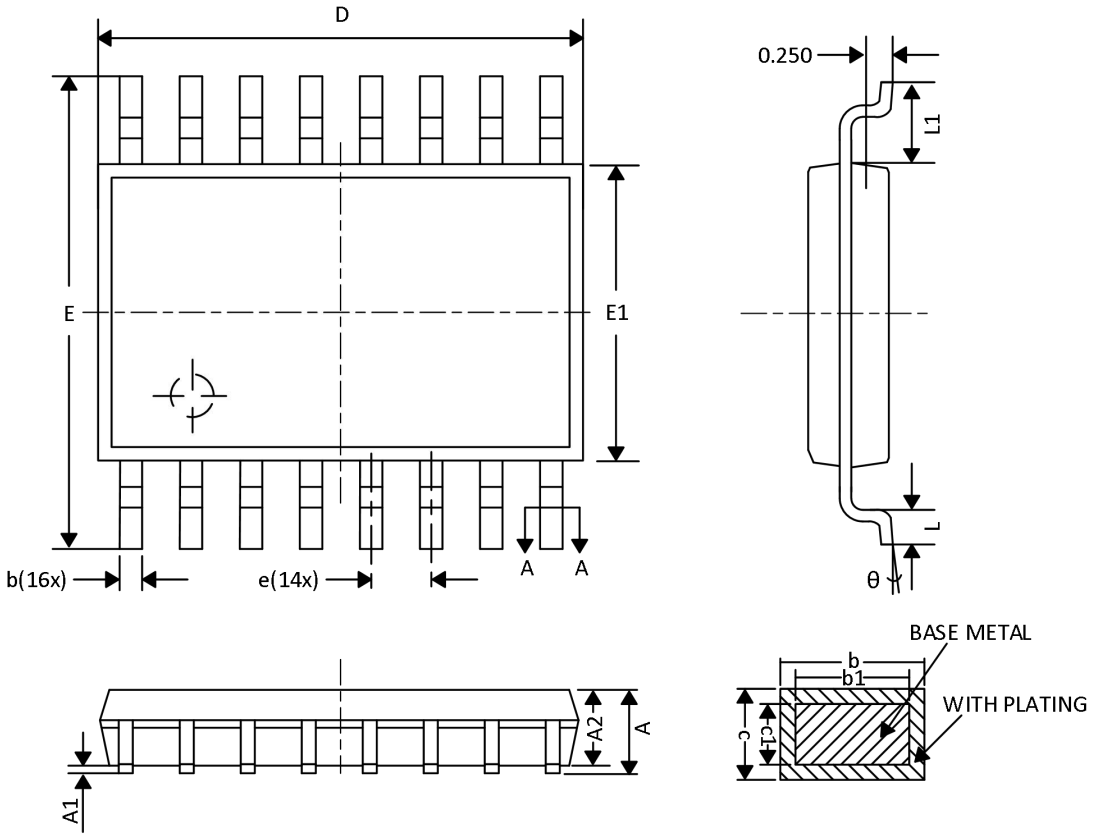

SYMBOL \ DIMENSION	MIN (mm)	TYP (mm)	MAX (mm)
A	-	-	1.20
A1	0.05	0.100	0.15
A2	0.90	1.00	1.05
b	0.20	-	0.28
b1	0.19	0.22	0.25
c	0.13	-	0.17
c1	0.120	0.127	0.14
D	4.90	5.00	5.10
E	6.20	6.40	6.60
E1	4.30	4.40	4.50
e		0.65BSC	
L1	0.85	1.00	1.15
L	0.45	0.60	0.75
θ	0	-	8°

Copyright © GATEMODE Corp.

SSOP16-208mil(Wide body）

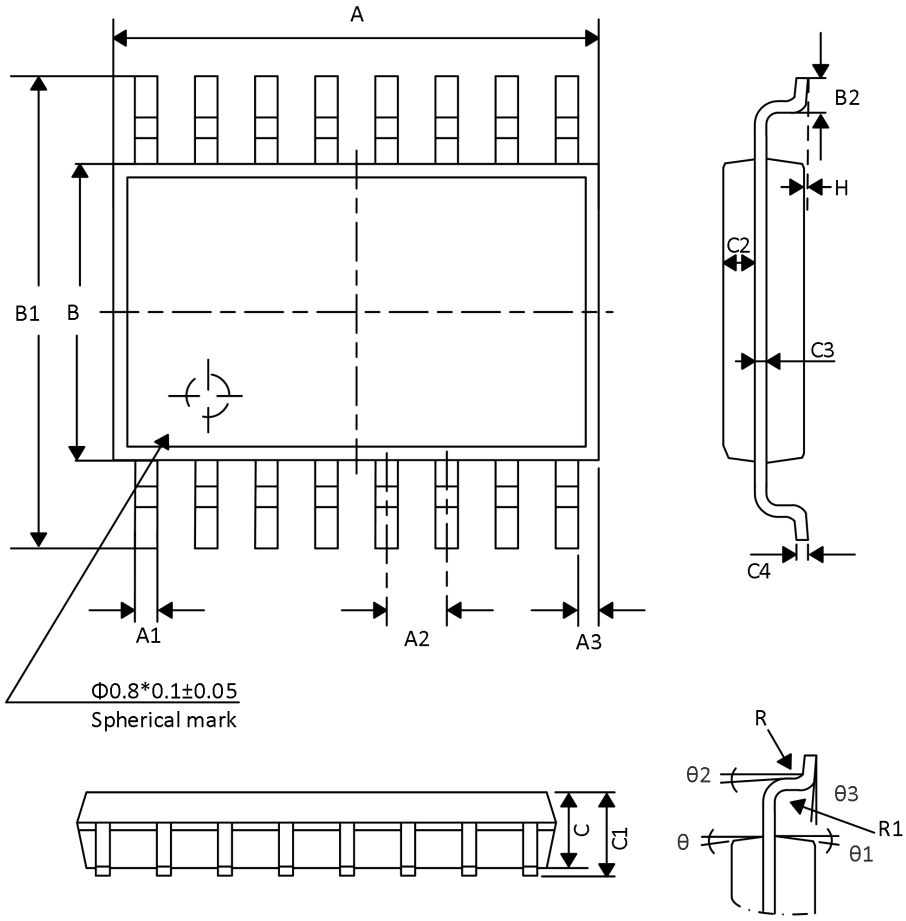

DIMENSION / SYMBOL	MIN(mm)	MAX(mm)	DIMENSION / SYMBOL	MIN(mm)	MAX(mm)
A	6.15	6.25	C3	0.152	
A1	0.30TYP		C4	0.172	
A2	0.65TYP		H	0.05	0.15
A3	0.675TYP		θ	12°TYP4	
B	5.25	5.35	θ1	12°TYP4	
B1	7.65	7.95	θ2	10°TYP	
B2	0.60	0.80	θ3	0°~8°	
C	1.70	1.80	R	0.20TYP	
C1	1.75	1.95	R1	0.15TYP	
C2	0.799				

Copyright © GATEMODE Corp.
Tel: (+86) 13135660803
Email: sales@gmmicro.com

SSOP16-208mil(Wide body）

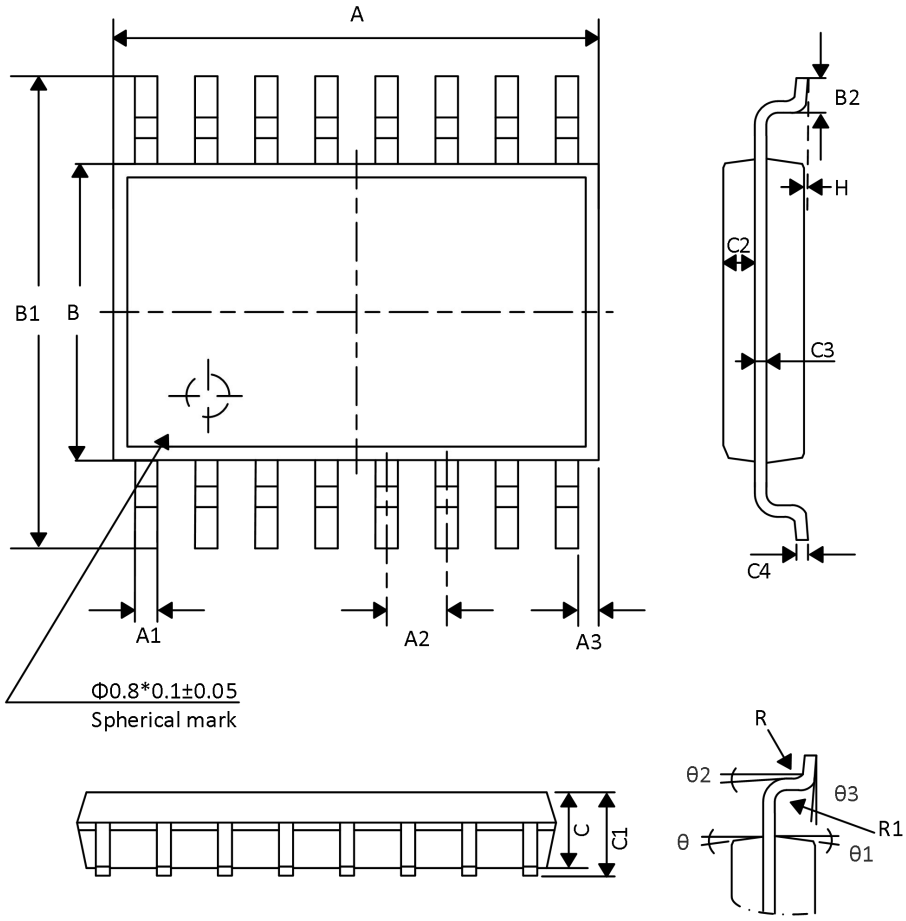

DIMENSION / SYMBOL	MIN(mm)	MAX(mm)	DIMENSION / SYMBOL	MIN(mm)	MAX(mm)
A	6.15	6.25	C3	0.152	
A1	0.30TYP		C4	0.172	
A2	0.65TYP		H	0.05	0.15
A3	0.675TYP		θ	12°TYP4	
B	5.25	5.35	θ1	12°TYP4	
B1	7.65	7.95	θ2	10°TYP	
B2	0.60	0.80	θ3	0°~8°	
C	1.70	1.80	R	0.20TYP	
C1	1.75	1.95	R1	0.15TYP	
C2	0.799				

Copyright © GATEMODE Corp.
Tel: (+86) 13135660803
Email: sales@gmmicro.com

Order Information

Order number	Package	Marking information	Operation Temperature Range	MSL Grade	Ship, Quantity	Green
GM3232HSA	SOP16	GM3232HSA	-40 to 125°C	3	T&R,2500	Rohs
GM3232HTA	TSSOP16	GM3232HTA	-40 to 125°C	3	T&R,2500	Rohs
GM3232HBA	SSOP16 (Wide body)	GM3232HBA	-40 to 125°C	3	T&R,2500	Rohs
GM3232HNA	SSOP16 (Narrow body)	GM3232HNA	-40 to 125°C	3	T&R,2500	Rohs

Copyright © GATEMODE Corp.
Tel: (+86) 13135660803
Email: sales@gmmicro.com