REVISIONS					
REV.	ECN NO.	LOCATION	DESCRIPTION	DATE	DESIGN
A2	N/A		产品尺寸变更	2026.01.15	阿树
A3	ECN-P-2026031601	A3X2	产品尺寸变更	2026.03.16	阿树

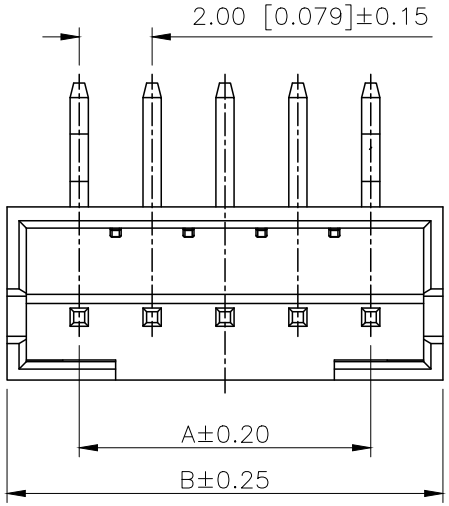

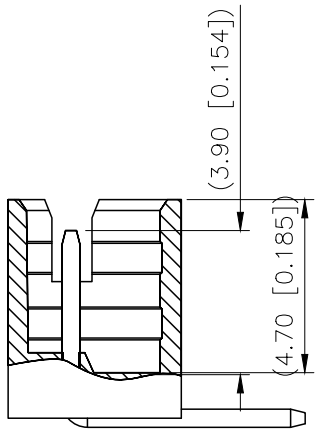

SECTION A-A

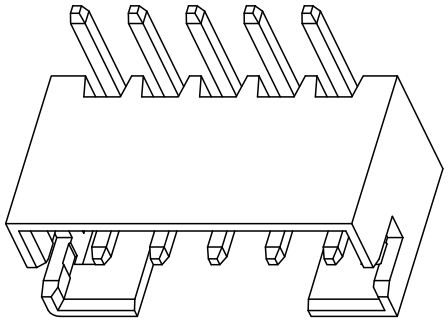

■SPECIFICATIONS
- Voltage rating:100V AC/DC
- Current rating:2A AC/DC
- Withstanding Voltage:800V AC/minute
- Temperature range:-40°C~+125°C
- Insulation resistance:≥1000MΩ
- Contact resistance:≤10mΩ
- After environmental testing:≤20mΩ

PART NO.:

X2016 W R-04-N0 SN
① ② ③ ④ ⑤ ⑥

①Series No
②Category:W-Wafer
③Welding Board Angle:R-Stright 90°
④Row No.Pin No:XX-02~20Pin
⑤Material : N0-PA66;
⑥Planting:Sn-Bright Tin Plating

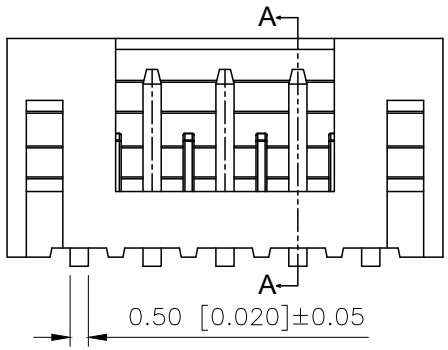

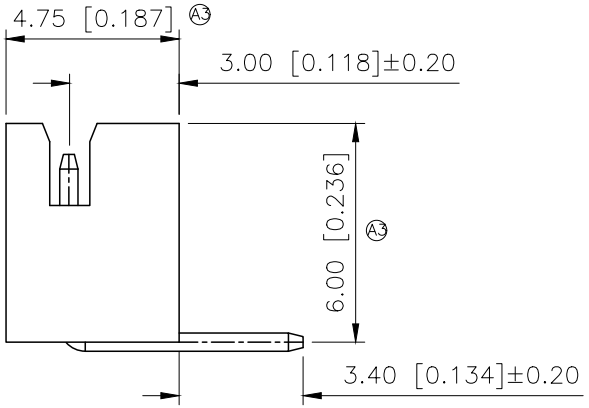

Poles	Dimensions(mm)		Poles	Dimensions(mm)	
	A	B		A	B
2	2.00	6.00	12	22.00	26.00
3	4.00	8.00	13	24.00	28.00
4	6.00	10.00	14	26.00	30.00
5	8.00	12.00	15	28.00	32.00
6	10.00	14.00	16	30.00	34.00
7	12.00	16.00	17	32.00	36.00
8	14.00	18.00	18	34.00	38.00
9	16.00	20.00	19	36.00	40.00
10	18.00	22.00	20	38.00	42.00
11	20.00	24.00			

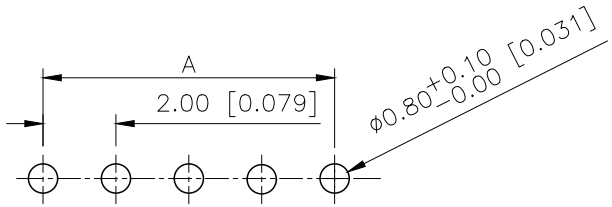

P.C.B LAYOUT

X2016WR-04-N0SN	Nylon 66 UL 94V-0	Brass	Tin-Plated	X2016H
PART N0	Material	Material(pin)	Finish(pin)	Suitable XKB Housing

AuGLAR	±5°
X.	±0.40
X.x	±0.30
X.xx	±0.20
X.xxx	±0.15
UNSPECIFIED TOLERAuCES	

XKB 星坤 Connection

DESIGN	阿树	VIEW:	MODEL TYPE: 2.00mm Crimp Style Connectors
CHECKED		UNIT: mm/in	PART NO.: X2016WR-04-N0SN
APPROVED		SIZE: A4	DWG NO.:

XKB INDUSTRIAL PRECISION CO.,LIMITED

SCALE	PAGE	REVISION
N/A	1/1	A3