FEATURES

- Output current in excess of 1.5A
- Internal short current circuit limiting
- Internal thermal overload protection
- Output voltage offered of 4% tolerance

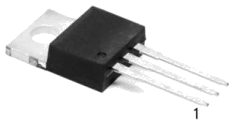

TO-220-3



TO-263-3



TO-263-2

ORDERING INFORMATION

DEVICE	Package Type	MARKING	Packing	Packing Qty
LM7905CT	TO-220-3	LM7905C	TUBE	1000pcs/box
LM7906CT	TO-220-3	LM7906C	TUBE	1000pcs/box
LM7908CT	TO-220-3	LM7908C	TUBE	1000pcs/box
LM7909CT	TO-220-3	LM7909C	TUBE	1000pcs/box
LM7912CT	TO-220-3	LM7912C	TUBE	1000pcs/box
LM7915CT	TO-220-3	LM7915C	TUBE	1000pcs/box
LM7918CT	TO-220-3	LM7918C	TUBE	1000pcs/box
LM7924CT	TO-220-3	LM7924C	TUBE	1000pcs/box
LM7905CS2/TR	TO-263-2	LM7905C	REEL	500 pcs/reel
LM7906CS2/TR	TO-263-2	LM7906C	REEL	500 pcs/reel
LM7908CS2/TR	TO-263-2	LM7908C	REEL	500 pcs/reel
LM7909CS2/TR	TO-263-2	LM7909C	REEL	500 pcs/reel
LM7912CS2/TR	TO-263-2	LM7912C	REEL	500 pcs/reel
LM7915CS2/TR	TO-263-2	LM7915C	REEL	500 pcs/reel
LM7918CS2/TR	TO-263-2	LM7918C	REEL	500 pcs/reel
LM7924CS2/TR	TO-263-2	LM7924C	REEL	500 pcs/reel
LM7905CS/TR	TO-263-3	LM7905C	REEL	500 pcs/reel
LM7906CS/TR	TO-263-3	LM7906C	REEL	500 pcs/reel
LM7908CS/TR	TO-263-3	LM7908C	REEL	500 pcs/reel
LM7909CS/TR	TO-263-3	LM7909C	REEL	500 pcs/reel
LM7912CS/TR	TO-263-3	LM7912C	REEL	500 pcs/reel
LM7915CS/TR	TO-263-3	LM7915C	REEL	500 pcs/reel
LM7918CS/TR	TO-263-3	LM7918C	REEL	500 pcs/reel
LM7924CS/TR	TO-263-3	LM7924C	REEL	500 pcs/reel

PIN CONFIGURATION

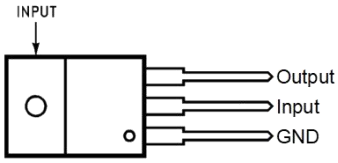

TO-220-3

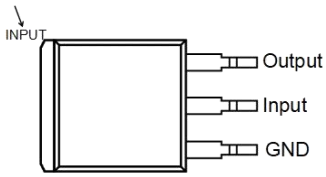

TO-263-3

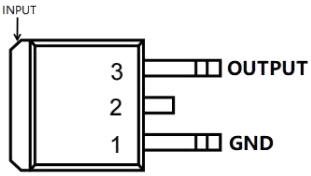

TO-263-2

ABSOLUTE MAXIMUM RATINGS

Condition	VALUE	UNIT
Maximum input voltage at T_J=25°C	-35	V
Maximum operating junction temperature	+125	℃
Operating Temperature Range	0 ~ +125	℃
Lead Temperature (TL) (Soldering, 10 seconds)	+245	℃

Note:Absolute Maximum Ratings indicate limits beyond which damage to the device may occur. Operating Ratings indicate conditions for which the device is intended to be functional, but specific performance is not ensured.

ELECTRICAL CHARACTERISTICS LM7905C

(V_{IN}= -10V, I_O = 500mA, C_{IN}=2.2μF, C_O=1.0μF, T_J=25°C, unless otherwise noted)

CHARACTERISTIC	SYMBOL	TEST CONDITION	NORMS		UNIT
			Min	Max	
Output Voltage	V_O	-7.0V ≥ V_{IN} ≥ -20V 5.0mA ≤ I_O ≤ 1.0 A	-4.8	-5.2	V
Line Regulation	ΔU_V	I_O = 100mA, -7.0V ≥ V_{IN} ≥ -25V I_O = 100mA, -8.0V ≥ V_{IN} ≥ -12V I_O = 500mA, -7.0V ≥ V_{IN} ≥ -25V I_O = 500mA, -8.0V ≥ V_{IN} ≥ -12V		47.5 23.5 95 47.5	mV
Load Regulation	ΔU_I	5.0mA≤ I_O ≤ 1.5 A 250mA≤ I_O ≤ 750mA		95 47.5	mV
Quiescent Current	I_B			7.8	mA
Quiescent Current Change	ΔI_B	-7.0V ≥ V_{IN} ≥ -25V 5.0mA ≤ I_O ≤ 1.5 A		1.25 0.48	mA

ELECTRICAL CHARACTERISTICS LM7906C

(V_{IN}= -11V, I_O = 500mA, C_{IN}=2.2μF, C_O=1.0μF, T_J=25°C, unless otherwise noted)

CHARACTERISTIC	SYMBOL	TEST CONDITION	NORMS		UNIT
			Min	Max	
Output Voltage	V_O	-8.0V ≥ V_{IN} ≥ -21V5.0mA≤ I_O ≤1.0 A	-5.76	-6.24	V
Line Regulation	ΔU_V	I_O = 100mA, -8.0V ≥ V_{IN} ≥ -25V I_O = 100mA, -9.0V ≥ V_{IN} ≥ -13V I_O = 500mA,-8.0V ≥ V_{IN} ≥ -25V I_O = 500mA, -9.0V ≥ V_{IN} ≥ -13V		57 28.5 114 57	mV
Load Regulation	ΔU_I	5.0mA≤ I_O ≤ 1.5 A 250mA≤ I_O ≤ 750mA		114 57	mV
Quiescent Current	I_B			7.8	mA
Quiescent Current Change	ΔI_B	-8.0V ≥ V_{IN} ≥ -25V 5.0mA≤ I_O ≤ 1.5 A		1.25 0.48	mA

ELECTRICAL CHARACTERISTICS LM7908C

(V_{IN}= -14V, I_O = 500mA, C_{IN}=2.2μF, C_O=1.0μF, T_J=25°C, unless otherwise noted)

CHARACTERISTIC	SYMBOL	TEST CONDITION	NORMS		UNIT
			Min	Max	
Output Voltage	V_O	-10.5V ≥ V_{IN} ≥ -23V 5.0mA≤ I_O ≤ 1.0 A	-7.68	-8.32	V
Line Regulation	ΔU_V	I_O = 100mA, -10.5V ≥ V_{IN} ≥ -25V I_O = 100mA, -11V ≥ V_{IN} ≥ -17V I_O = 500mA, -10.5V≥ V_{IN} ≥ -25V I_O = 500mA, -11V≥ V_{IN} ≥ -17V		76 38 152 76	mV
Load Regulation	ΔU_I	5.0mA≤ I_O ≤ 1.5 A 250mA≤ I_O ≤ 750mA		152 76	mV
Quiescent Current	I_B			7.8	mA
Quiescent Current Change	ΔI_B	-10.5V ≥ V_{IN} ≥ -25V 5.0mA≤ I_O ≤ 1.5 A		0.98 0.48	mA

ELECTRICAL CHARACTERISTICS LM7909C

(V_{IN}= -16V, I_O = 500mA, C_{IN}=2.2μF, C_O=1.0μF, T_J=25°C, unless otherwise noted)

CHARACTERISTIC	SYMBOL	TEST CONDITION	NORMS		UNIT
			Min	Max	
Output Voltage	V_O	-10.5V ≥ V_{IN} ≥ -25V 5.0mA≤ I_O ≤ 1.0 A	-8.60	-9.40	V
Line Regulation	ΔU_V	I_O = 100mA, -11.8V ≥ V_{IN} ≥ -25V I_O = 100mA, -12V ≥ V_{IN} ≥ -20V I_O = 500mA, -11.8V≥ V_{IN} ≥ -25V I_O = 500mA, -12V≥ V_{IN} ≥ -20V		86 43 172 86	mV
Load Regulation	ΔU_I	5.0mA≤ I_O ≤ 1.5 A 250mA≤ I_O ≤ 750mA		171 86	mV
Quiescent Current	I_B			7.8	mA
Quiescent Current Change	ΔI_B	-10.5V ≥ V_{IN} ≥ -25V 5.0mA≤ I_O ≤ 1.5 A		1.02 0.48	mA

ELECTRICAL CHARACTERISTICS LM7912C

(V_{IN}= -19V, I_O = 500mA, C_{IN}=2.2μF, C_O=1.0μF, T_J=25°C, unless otherwise noted)

CHARACTERISTIC	SYMBOL	TEST CONDITION	NORMS		UNIT
			Min	Max	
Output Voltage	V_O	-14.5V ≥ V_{IN} ≥-21V 5.0mA ≤ I_O ≤ 1.0 A	-11.52	-12.48	V
Line Regulation	ΔU_V	I_O = 100mA, -14.5V ≥ V_{IN} ≥ -30V I_O = 100mA, -16V ≥ V_{IN} ≥ -22V I_O = 500mA, -14.5V ≥ V_{IN} ≥ -30V I_O = 500mA, -16V ≥ V_{IN} ≥ -22V		114 58.5 228 114	mV
Load Regulation	ΔU_I	5.0mA ≤ I_O ≤ 1.5 A 250mA ≤ I_O ≤ 750mA		228 114	mV
Quiescent Current	I_B			7.8	mA
Quiescent Current Change	ΔI_B	-14.5V ≥ V_{IN} ≥ -30V 5.0mA ≤ I_O ≤ 1.5 A		1.25 0.48	mA

ELECTRICAL CHARACTERISTICS LM7915C

(V_{IN}= -23V, I_O = 500mA, C_{IN}=2.2μF, C_O=1.0μF, T_J=25°C, unless otherwise noted)

CHARACTERISTIC	SYMBOL	TEST CONDITION	NORMS		UNIT
			Min	Max	
Output Voltage	V_O	-17.5V ≥ V_{IN} ≥ -30V 5.0mA ≥ I_O ≥ 1.0 A	-14.4	-15.6	V
Line Regulation	ΔU_V	I_O = 100mA, -17.5V ≥ V_{IN} ≥ -30V I_O = 100mA, -20V ≥ V_{IN} ≥ -26V I_O = 500mA, -17.5V ≥ V_{IN} ≥ -30V I_O = 500mA, -20V ≥ V_{IN} ≥ -26V		142 71 285 142	mV
Load Regulation	ΔU_I	5.0mA ≤ I_O ≤ 1.5 A 250mA ≤ I_O ≤ 750mA		285 142	mV
Quiescent Current	I_B			7.8	mA
Quiescent Current Change	ΔI_B	-17.5V ≥ V_{IN} ≥ -30V 5.0mA≤ I_O ≤ 1.5 A		0.98 0.48	mA

ELECTRICAL CHARACTERISTICS LM7918C

(V_{IN}= -27V, I_O = 500mA, C_{IN}=2.2μF, C_O=1.0μF, T_J=25°C, unless otherwise noted)

CHARACTERISTIC	SYMBOL	TEST CONDITION	NORMS		UNIT
			Min	Max	
Output Voltage	V_O	-21V ≥ V_{IN} ≥ -33V 5.0mA ≤ I_O ≤ 1.0 A	-17.28	-18.72	V
Line Regulation	ΔU_V	I_O = 100mA, -21V ≥ V_{IN} ≥ -33V I_O = 100mA, -24V ≥ V_{IN} ≥ -30V I_O = 500mA, -21V ≥ V_{IN} ≥ -33V I_O = 500mA, -24V ≥ V_{IN} ≥ -30V		171 85.5 342 171	mV
Load Regulation	ΔU_I	5.0mA≤ I_O ≤ 1.5 A 250mA≤I_O ≤ 750mA		342 171	mV
Quiescent Current	I_B			7.8	mA
Quiescent Current Change	ΔI_B	-21V ≥ V_{IN} ≥ -33V 5.0mA ≤ I_O ≤ 1.5 A		0.98 0.48	mA

ELECTRICAL CHARACTERISTICS LM7924C

(V_{IN}= -33V, I_O = 500mA, C_{IN}=2.2μF, C_O=1.0μF, T_J=25°C, unless otherwise noted)

CHARACTERISTIC	SYMBOL	TEST CONDITION	NORMS		UNIT
			Min	Max	
Output Voltage	V_O	-27V ≥ V_{IN} ≥ -38V 5.0mA ≤ I_O ≤ 1.0 A	-23	-25	V
Line Regulation	ΔU_V	I_O = 100mA, -27V ≥ V_{IN} ≥ -38V I_O = 100mA, -30V ≥ V_{IN} ≥ -36V I_O = 500mA, -27V ≥ V_{IN} ≥ -38V I_O = 500mA, -30V ≥ V_{IN} ≥ -36V		228 114 446 228	mV
Load Regulation	ΔU_I	5.0mA ≤ I_O ≤ 1.5 A 250mA ≤ I_O ≤ 750mA		446 228	mV
Quiescent Current	I_B			7.8	mA
Quiescent Current Change	ΔI_B	-27V ≥ V_{IN} ≥ -33V 5.0mA ≤ I_O ≤ 1.5 A		0.98 0.48	mA

PHYSICAL DIMENSIONS

TO-263-3

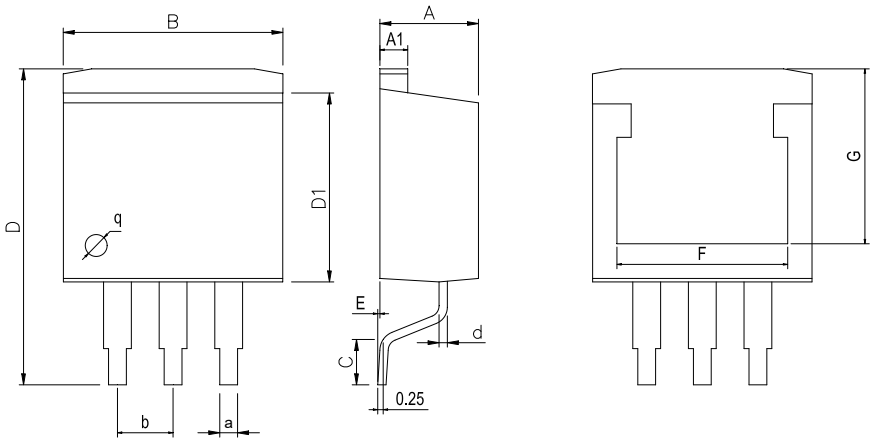

Dimensions In Millimeters(TO-263-3)											
Symbol:	**A**	**A1**	**B**	**C**	**D**	**D1**	**E**	**F**	**G**	**a**	**b**
Min:	4.45	1.22	10	1.89	14.1	8.38	0	7.20	7.20	0.71	2.54BSC
Max:	4.62	1.32	10.4	2.19	15.3	8.89	0.305	8.10	8.10	0.97	

TO-220-3

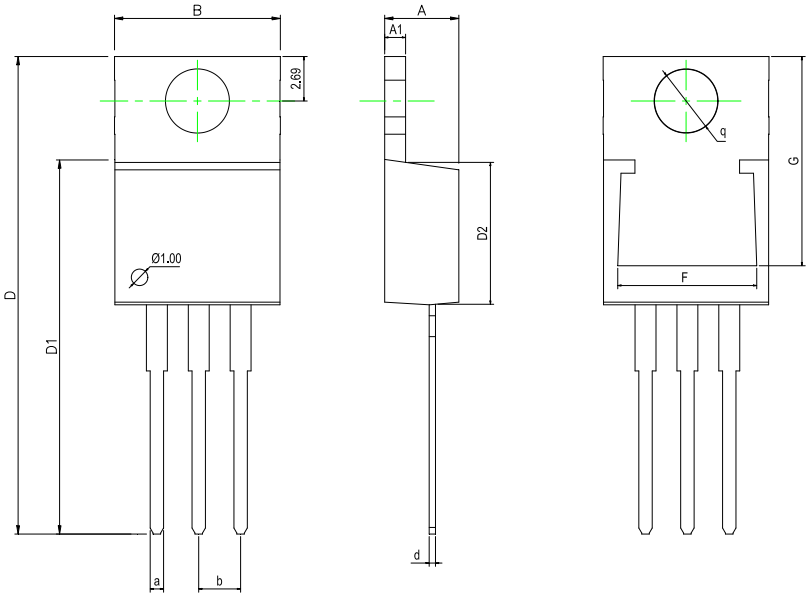

Dimensions In Millimeters(TO-220-3)												
Symbol:	A	A1	B	D	D1	D2	F	G	a	d	b	q
Min:	4.45	1.22	10	28.2	22.22	8.50	8.30	12.55	0.71	0.33	2.54BS	3.80TYP
Max:	4.62	1.32	10.4	28.9	22.62	9.10	8.55	12.75	0.97	0.42	C	

PHYSICAL DIMENSIONS

TO-263-2

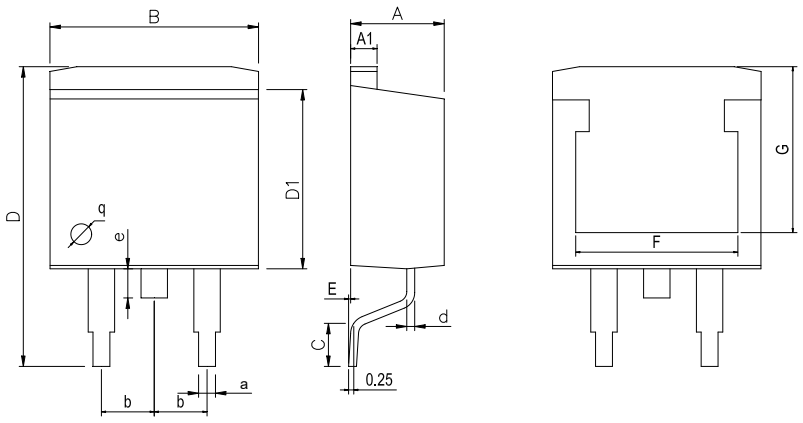

Dimensions In Millimeters(TO-263-2)												
Symbol:	**A**	**A1**	**B**	**C**	**D**	**D1**	**E**	**F**	**G**	**a**	**e**	**b**
Min:	4.45	1.22	10	2.25	14.5	8.45	0	7.20	7.20	0.71	1.10	2.54BSC
Max:	4.62	1.32	10.4	2.85	15.4	9.10	0.305	8.10	8.10	0.97	1.70	

REVISION HISTORY

REVISION NUMBER	DATE	REVISION	PAGE
V1.0	2018-1	New	1-10
V1.1	2023-9	Update Lead Temperature、Add annotation for Maximum Ratings.	2
V1.2	2025-12	Update important statements、Update TO263-2 and TO263-3 Dimension drawing	7、8、10

IMPORTANT STATEMENT:

Huaguan Semiconductor reserves the right to change products and services offered without prior notice. Customers should obtain the latest relevant information before placing orders and verify that such information is current and complete. Huaguan Semiconductor assumes no responsibility or liability for altered documents.

Customers are responsible for complying with safety standards and implementing safety measures when using Huaguan Semiconductor products in system design and end-product manufacturing. You assume full responsibility for: selecting the appropriate Huaguan Semiconductor products for your application; designing, validating, and testing your application; and ensuring that your application complies with applicable standards and all other safety, security, or other requirements. This is to prevent potential risks that may lead to personal injury or property damage.

Huaguan Semiconductor products are not approved for use in life support, military, aerospace, or other high-risk applications. Huaguan products are neither intended nor warranted for use in such systems or equipment. Any failure or malfunction may lead to personal injury or severe property damage. Such applications are deemed "Unsafe Use." Unsafe Use includes, but is not limited to: surgical and medical equipment, nuclear energy control equipment, aircraft or spacecraft instruments, control or operation of vehicle power, braking, or safety systems, traffic signal instruments, all types of safety devices, and any other applications intended to support or sustain life. Huaguan Semiconductor shall not be liable for consequences resulting from Unsafe Use in these fields. Users must independently evaluate and assume all risks. Any issues, liabilities, or losses arising from the use of products beyond their approved applications shall be solely borne by the user. Users may not claim any compensation from Huaguan Semiconductor based on these terms. If any third party claims against Huaguan Semiconductor due to such Unsafe Use, the user shall compensate Huaguan Semiconductor for all resulting damages and liabilities.

Huaguan Semiconductor provides technical and reliability data (including datasheets), design resources (including reference designs), application or other design advice, web tools, safety information, and other resources for its semiconductor products. However, no guarantee is made that these resources are free from defects, and no express or implied warranties are provided. The use of testing and other quality control techniques is limited to Huaguan Semiconductor's quality assurance scope. Not all parameters of each device are tested.

Huaguan Semiconductor's documentation authorizes you to use these resources only for developing applications related to the products described herein. You are not granted rights to any other intellectual property of Huaguan Semiconductor or any third party. Any other reproduction or display of these resources is strictly prohibited. You shall fully indemnify Huaguan Semiconductor and its agents against any claims, damages, costs, losses, and liabilities arising from your use of these resources. Huaguan Semiconductor shall not be held responsible.