Mark	Qty	Engineering Change Area

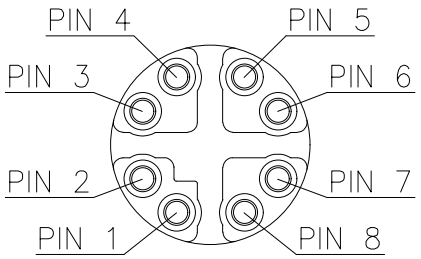

VIEW A

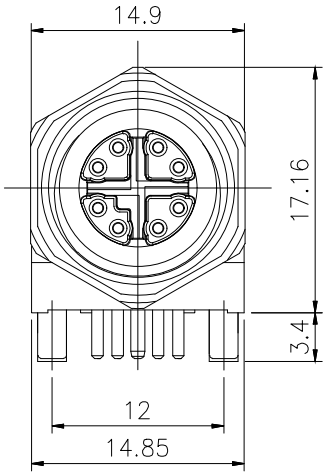

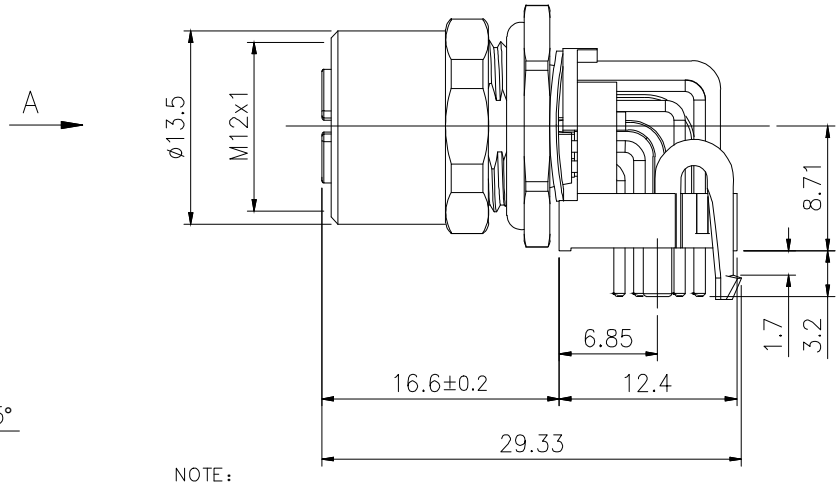

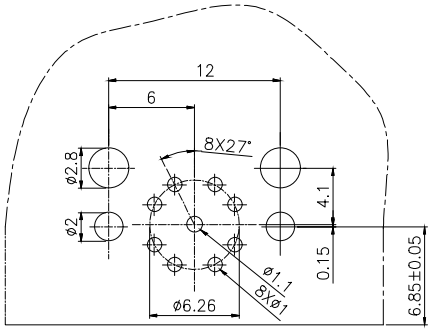

RECOMMENDED PCB LAYOUT

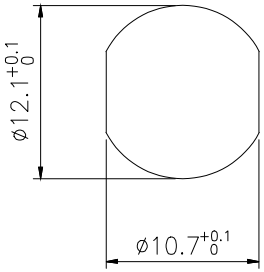

PANEL CUT OUT

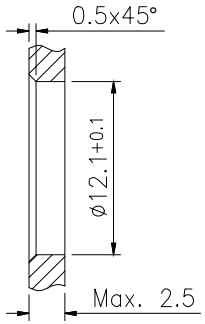

NOTE:
1. ELECTRICAL:
 1.1.RATED VOLTAGE: 50VAC/60 DC
 1.2.RATED CURRENT: 0.5A
 1.3.CONTACT RESISTANCE: ≤15mΩ
 1.4.INSULATION RESISTANCE: ≥100MΩ
 1.5.Rated impulse voltage: 800V
2. ENVIRONMENTAL:
 2.1.OPERATING TEMPERATURE: −25℃ TO +85℃
 2.2.PROTECTION GRADE: IP67,WHEN TIGHT LOCKED
 2.3.POLLUTION DEGREE: 3
3.CONTACT MATERIAL: BRASS NI PLATED UNDER GOLD PLATED
4.CONFORM TO IEC 61076−2−109

* UNLESS OTHERWISE SPECIFIED TOLERANCES ON DECIMAL IS:

X.	± 0.38	X°	± 2°
X.X	± 0.25		
X.XX	± 0.15		
X.XXX	± 0.10		

All dimensions are in mm

	Signature	Date
Created by		
Checked by		
Approved by		
State	First Release	

Material:

Finishing:

Phase Marking	Weight	Scale
		1:1

TOPONELEC

拓宜(上海)工控电器设备有限公司
Topone(Shanghai) Industrial Control Electrical Equipment Co., LTD.

P/N	61060607
MD/CD	

Part Name: C12B-MAX-RM-8 SH

Rev. 01

Page: 1 OF 1