I2C-Compatible (2-wire) Serial EEPROM

1024-Kbit

DATASHEET

Features

- Low Voltage Operation
  - VCC = 1.7V to 5.5V
- Compatible with all I2C bidirectional data transfer protocol
- Memory array:
  - 1024 Kbits (128 Kbytes) of EEPROM
  - Page size: 256 bytes
  - Additional Write lockable page
- Single supply voltage and high speed:
  - 400kHz@1.7V
  - 1MHz@2.5V
- Random and sequential Read modes
- Write:
  - Byte Write within 5 ms
  - Page Write within 5 ms
  - Partial Page Writes Allowed
- Write Protect Pin for Hardware Data Protection
- Schmitt Trigger, Filtered Inputs for Noise Suppression
- High-reliability
  - Endurance: 1 Million Write Cycles
  - Data Retention: 100 Years
- Enhanced ESD/Latch-up protection
  - HBM 6000V
- 8-lead PDIP/SOP/TSSOP/UDFN/WLCSP packages

Description

- The ZD24C1MA provides 1048576 bits of serial electrically erasable and programmable read-only memory (EEPROM), organized as 131072 words of 8 bits each.
- The ZD24C1MA offers an additional page, named the Identification Page (256 bytes). The Identification Page can be used to store sensitive application parameters which can be (later) permanently locked in Read-only mode.
- The device is optimized for use in many industrial and commercial applications where low-power and low-voltage operation are essential.

Pin Configuration

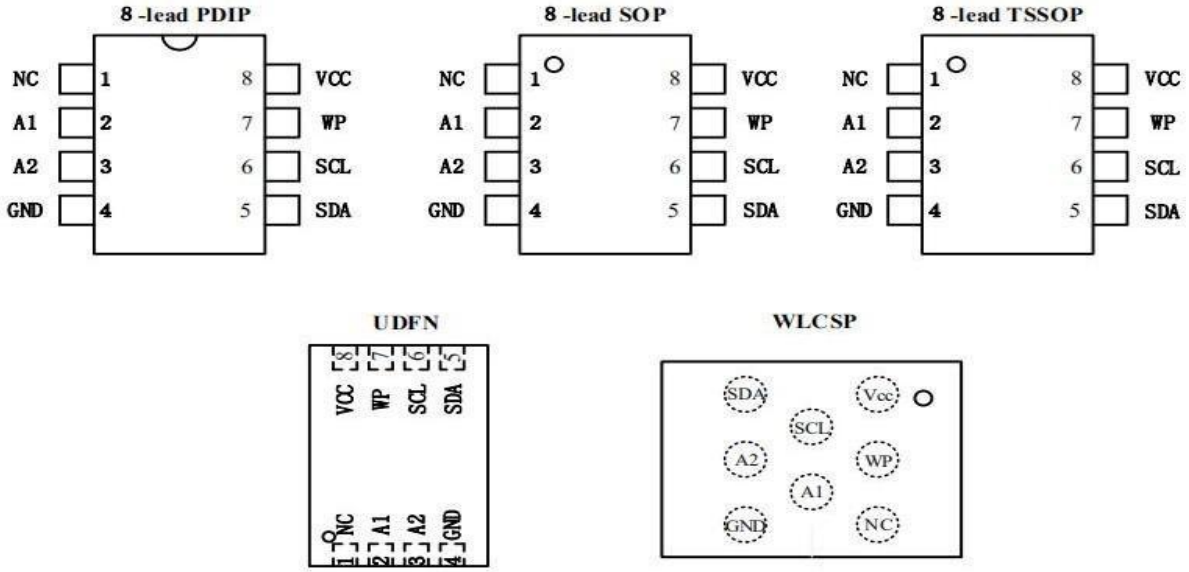

1. Pin Descriptions and Pinouts

Pin	Name	Type	Description
1	NC	I/O	No Connect
2	A1	Input	Slave Address Setting
3	A2	Input	Slave Address Setting
4	Vss	Ground	Ground
5	SDA	I/O	Serial Data Input and Serial Data Output
6	SCL	Input	Serial Clock Input
7	WP	Input	Write Control, Low Enable Write
8	Vcc	Power	Power

Serial Clock (SCL): The SCL input is used to positive-edge clock data in and negative-edge clock data out of each device.

Serial Data (SDA): The SDA pin is bidirectional for serial data transfer. This pin is open drain driven and may be wire-OR'ed with any number of other open-drain or open-collector devices.

Device Addresses (A2 and A1): The A2 and A1 pins are device address inputs. Typically, the A2 and A1 pins are for hardware addressing and a total of 4 devices can be connected on a single bus system. If these pins are left floating, the A2 and A1 pins will be internally pulled down to Vss. As shown in the following table1.

Write Control (WP): The Write Control input, when WP is connected directly to Vcc, all write operations to the memory are inhibited. When connected to Vss, allows normal write operations. If the pin is left floating, the WP pin will be internally pulled down to Vss.

WP Pin Status	ZD24C1MA
At VCC	Full(1024K)Array
At GND	Normal Read/Write Operations

Tabe1

2. Device Block Diagram and System Configuration

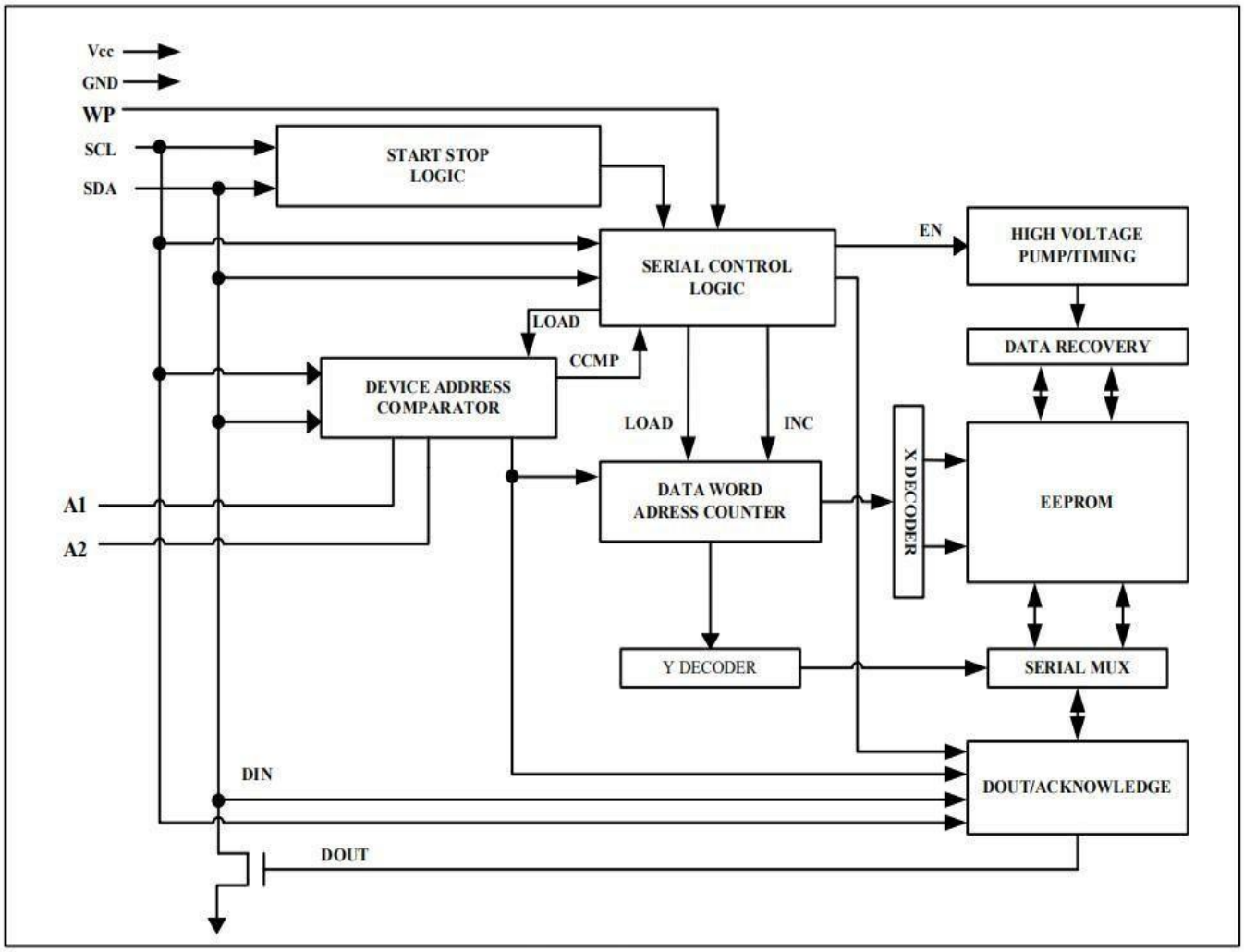

Figure 1

3. Functional Description

1.Memory Organization

ZD24C1MA, 1M SERIAL EEPROM: Internally organized with 512 pages of 256 bytes each, the 1M requires a 17-bit data word address for random word addressing.

2. Device Operation

CLOCK and DATA TRANSITIONS: The SDA pin is normally pulled high with an external device. Data on the SDA pin may change only during SCL low time periods (see Figure 2). Data changes during SCL high periods will indicate a start or stop condition as defined below.

START CONDITION: A high-to-low transition of SDA with SCL high is a start condition which must precede any other command (see Figure 3).

STOP CONDITION: A low-to-high transition of SDA with SCL high is a stop condition. After a read sequence, the stop command will place the EEPROM in a standby power mode (see Figure 3).

ACKNOWLEDGE: All addresses and data words are serially transmitted to and from the EEPROM in 8-bit words. The EEPROM sends a "0" to acknowledge that it has received each word. This happens during the ninth clock cycle.

STANDBY MODE: The ZD24C1MA features a low-power standby mode which is enabled:

1.After a fresh power up.

2.After receiving a STOP bit in read mode.

3.After completing a self-time internal programming operation.

MEMORY RESET: After an interruption in protocol, power loss or system reset, any two-wire part can be reset by following these steps:

1. Create a start condition.
2. Clock nine cycles.
3. Create another start bit followed by stop bit condition.

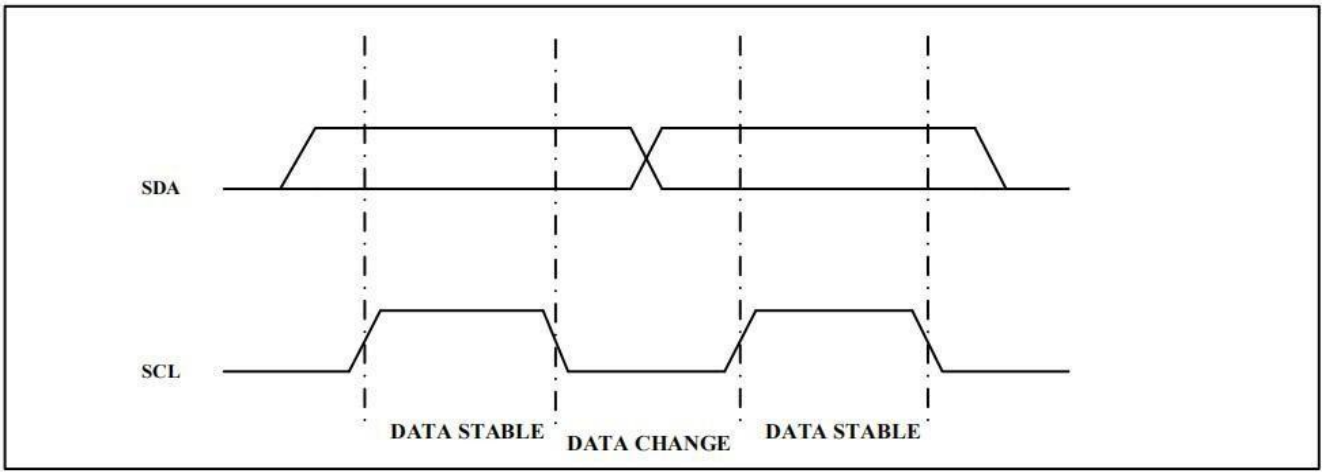

Figure 2. Data Validity

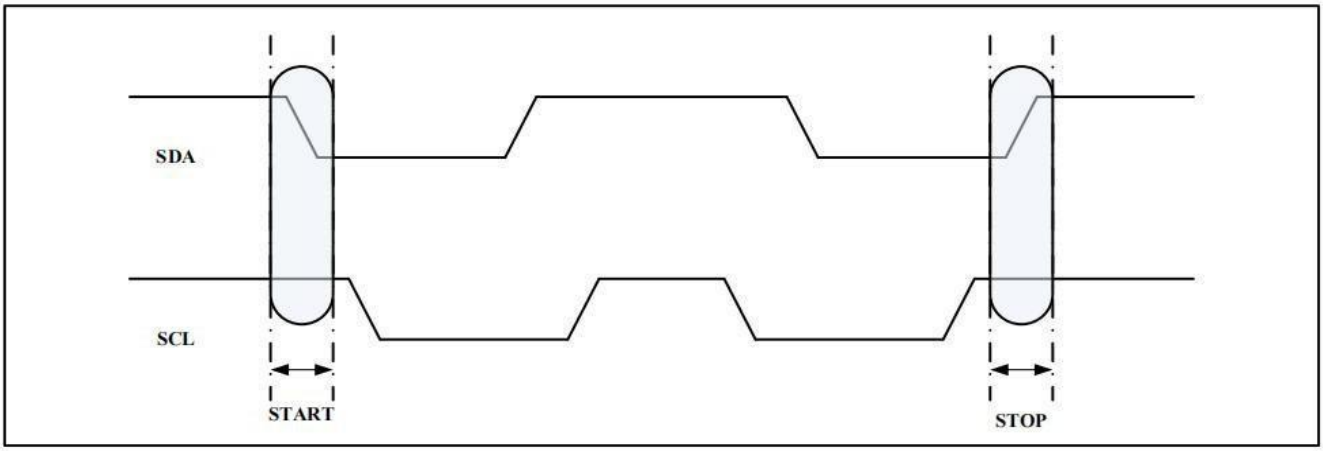

Figure 3. Start and Stop Definition

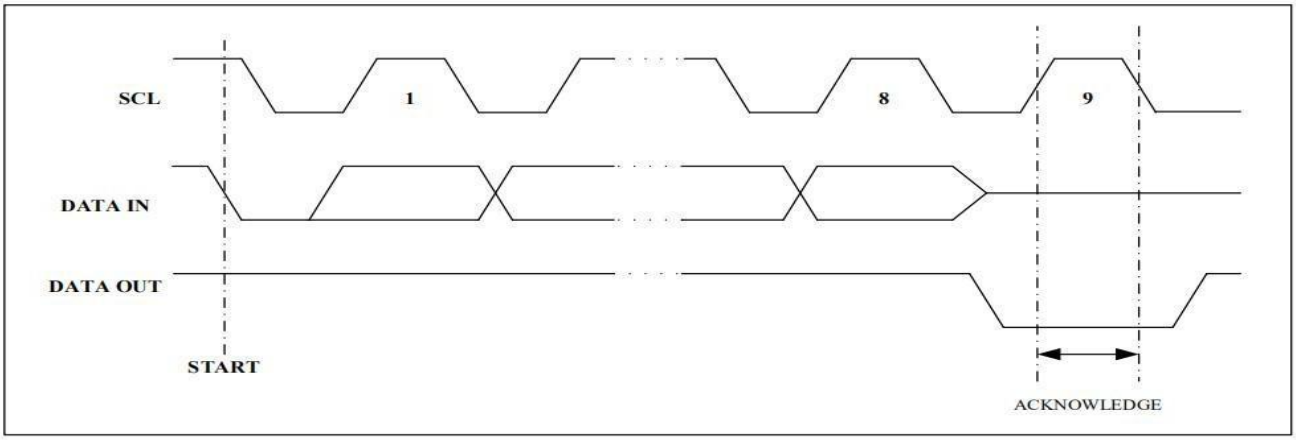

Figure 4. Output Acknowledge

4.Device Addressing

The 1M EEPROM devices all require an 8-bit device address word following a start condition to enable the chip for a read or write operation (see **Figure 5**)

The device address word consists of a mandatory "1", "0" sequence for the first four most significant bits as shown. This is common to all the Serial EEPROM devices.

The 1M EEPROM uses A2 and A1 device address bits and one world address bit to allow as much as four devices on the same bus. These 2 device address bits must be compared to their corresponding hardwired input pins. The A2 and A1 pins use an internal proprietary circuit that biases them to a logic low condition if the pins are allowed to float.

The eighth bit of the device address is the read/write operation select bit. A read operation is initiated if this bit is high and a write operation is initiated if this bit is low.

Upon a compare of the device address, the EEPROM will output a "0". If a compare is not made, the chip will return to a standby state.

MSB							LSB
1	0	1	0	A2	A1	B16	R/W
B15	B14	B13	B12	B11	B10	B9	B8
B7	B6	B5	B4	B3	B2	B1	B0

Figure 5. Device Address and two 8-bit data word address

DATA SECURITY: The ZD24C1MA has a hardware data protection scheme that allows the user to write protect the entire memory when the WP pin is at VCC.

5. Write Operations

BYTE WRITE:

A write operation requires two 8-bit data word address following the device address word and acknowledgment. Upon receipt of this address, the EEPROM will again respond with a "0" and then clock in the first 8-bit data word. Following receipt of the 8-bit data word, the EEPROM will output a "0" and the addressing device, such as a microcontroller, must terminate the write sequence with a stop condition. At this time the EEPROM enters an internally timed write cycle, tWR, to the nonvolatile memory. All inputs are disabled during this write cycle and the EEPROM will not respond until the write is complete (see **Figure 6**).

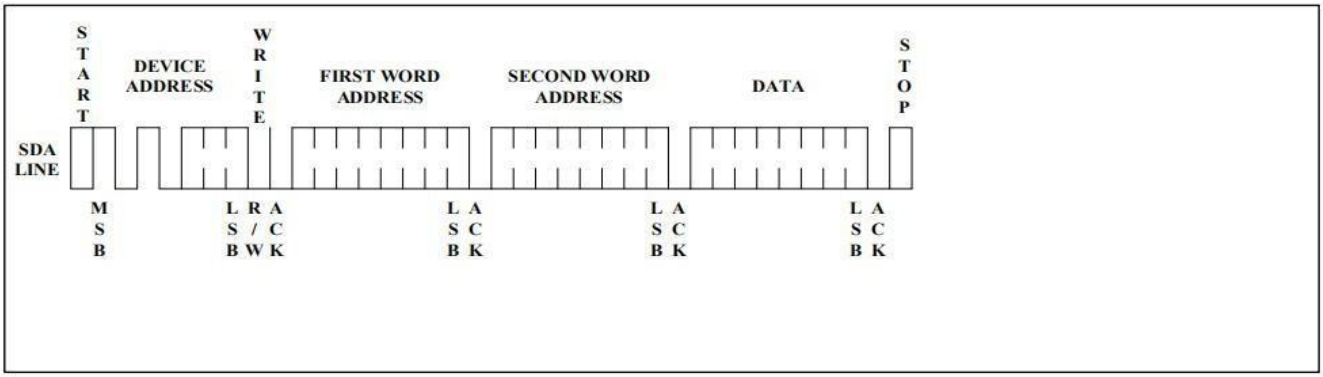

Figure 6. Byte Write

PAGE WRITE:

The Page Write mode allows up to 256 bytes to be written in a single Write cycle. A page write is initiated the same as a byte write, but the microcontroller does not send a stop condition after the first data word is clocked in. Instead, after the EEPROM acknowledges receipt of the first data word, the microcontroller can transmit up to 255 more data words. The EEPROM will respond with a “0” after each data word received. The microcontroller must terminate the page write sequence with a stop condition (see **Figure 7**).

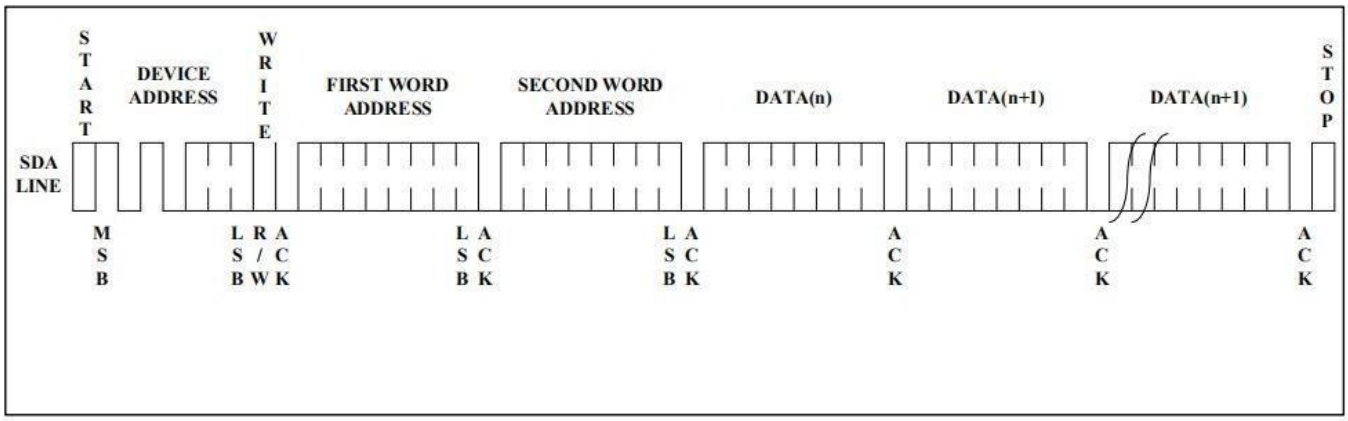

Figure 7. Page Write

The data word address lower eight bits are internally incremented following the receipt of each data word. The higher data word address bits are not incremented, retaining the memory page row location. When the word address, internally generated, reaches the page boundary, the following byte is placed at the beginning of the same page. If more than 256 data words are transmitted to the EEPROM, the data word address will "roll over" and previous data will be overwritten.

WRITE IDENTIFICATION PAGE:

The Identification Page (256 bytes) is an additional page which can be written and (later) permanently locked in Read-only mode. It is written by issuing the Write Identification Page instruction. This instruction uses the same protocol and format as Page Write (into memory array), except for the following differences: Device type identifier = 1011b

MSB address bits B16/B8 are don't care except for address bit B10 which must be "0".

LSB address bits B7/B0 define the byte address inside the Identification page.

If the Identification page is locked, the data bytes transferred during the Write Identification Page instruction are not acknowledged (NoAck).

ACKNOWLEDGE POLLING:

Once the internally timed write cycle has started and the EEPROM inputs are disabled, acknowledge polling can be initiated. This involves sending a start condition followed by the device address word. The read/write bit is representative of the operation desired. Only if the internal write cycle has completed will the EEPROM respond with a "0", allowing the read or write sequence to continue.

6.Read Operations

Read operations are initiated the same way as write operations with the exception that the read/write select bit in the device address word is set to "1". There are three read operations: current address read, random address read and sequential read.

6.1 CURRENT ADDRESS READ:

The internal data word address counter maintains the last address accessed during the last read or write operation, incremented by one. This address stays valid between operations as long as the chip power is maintained. The address "roll over" during read is from the last byte of the last memory page to the first byte of the first page. The address "roll over" during write is from the last byte of the current page to the first byte of the same page. Once the device address with the read/write select bit set to "1" is clocked in and acknowledged by the EEPROM, the current address data word is serially clocked out. The microcontroller does not respond with an input "0" but does generate a following stop condition (see **Figure 8**).

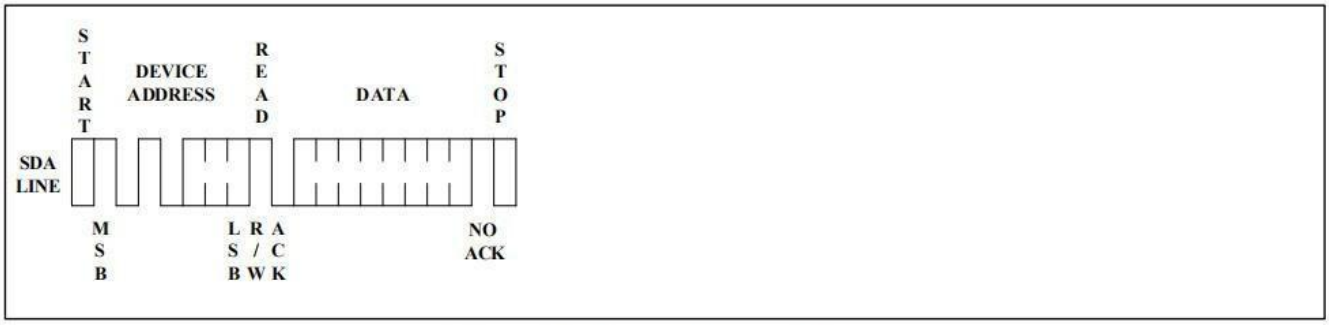

Figure 8. Current Address Read

6.2 RANDOM READ:

A random read requires a "dummy" byte write sequence to load in the data word address. Once the device address word and data word address are clocked in and acknowledged by the EEPROM, the microcontroller must generate another start condition. The microcontroller now initiates a current address read by sending a device address with the read/write select bit high. The EEPROM acknowledges the device address and serially clocks out the data word. The microcontroller does not respond with a "0" but does generate a following stop condition (see **Figure 9**)

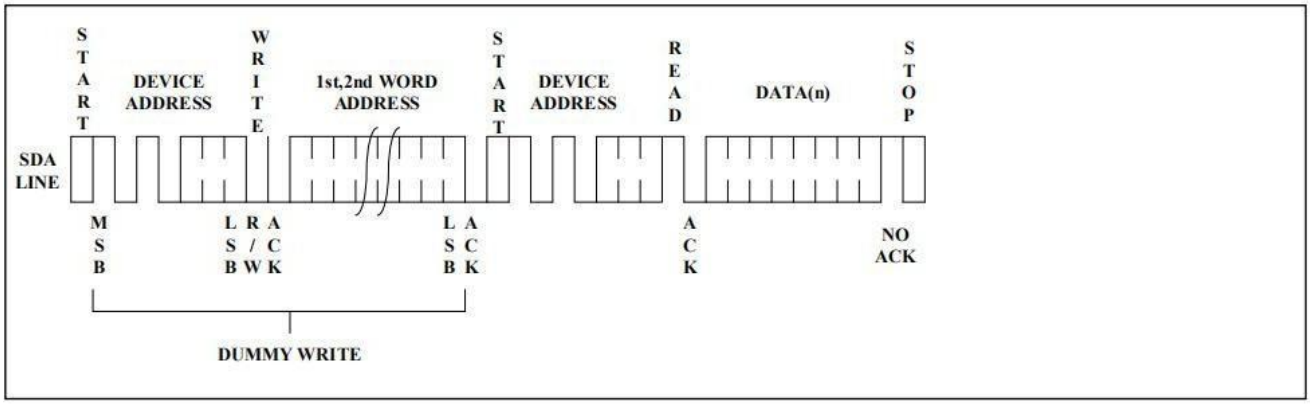

Figure 9. Random Read

6.3 SEQUENTIAL READ:

Sequential reads are initiated by either a current address read or a random address read. After the microcontroller receives a data word, it responds with an acknowledge. As long as the EEPROM receives an acknowledge, it will continue to increment the data word address and serially clock out sequential data words. When the memory address limit is reached, the data word address will "roll over" and the sequential read will continue. The sequential read operation is terminated when the microcontroller does not respond with a "0" but does generate a following stop condition (see **Figure 10**).

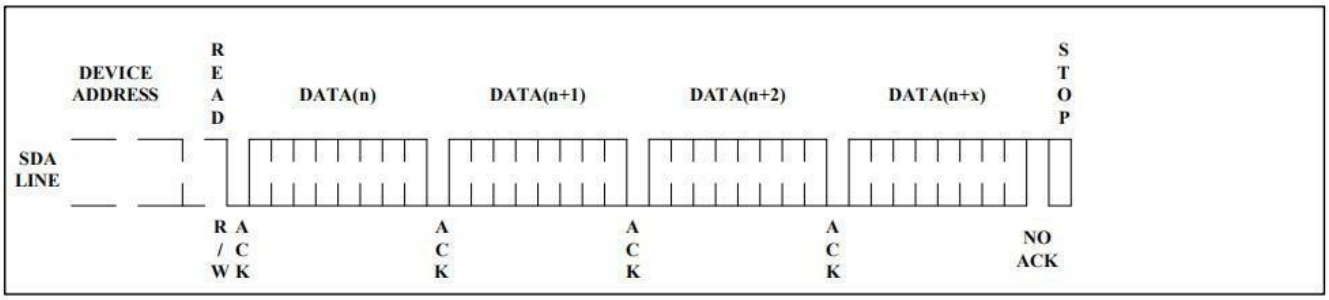

Figure 10. Sequential Read

READ IDENTIFICATION PAGE:

The Identification Page (256 bytes) is an additional page which can be written and (later) permanently locked in Read-only mode.

The Identification Page can be read by issuing an Read Identification Page instruction. This instruction uses the same protocol and format as the Random Address Read (from memory array) with device type identifier defined as 1011b. The MSB address bits B16/B8 are don't care, the LSB address bits B7/B0 define the byte address inside the Identification Page. The number of bytes to read in the ID page must not exceed the page boundary (e.g.: when reading the Identification Page from location 10d, the number of bytes should be less than or equal to 246, as the ID page boundary is 256 bytes)

LOCK IDENTIFICATION PAGE:

The Lock Identification Page instruction (Lock ID) permanently locks the Identification page in Read-only mode. The Lock ID instruction is similar to Byte Write (into memory array) with the following specific conditions:
Device type identifier = 1011b
Address bit B10 must be ‘1’; all other address bits are don't care
The data byte must be equal to the binary value xxxx xx1x, where x is don't care

7.Electrical Characteristics

Absolute Maximum Stress Ratings:

- DC Supply Voltage.....-0.5V to +6.25V
- Input / Output Voltage.....-0.5V to +0.6.25V
- Operating Ambient Temperature..... . -40℃ to +105℃
- Storage Temperature..... . -65℃ to +150℃
- Electrostatic pulse (Human Body model) 6000V

Comments:

Stresses above those listed under "Absolute Maximum Ratings" may cause permanent damage to this device. These are stress ratings only. Functional operation of this device at these or any other conditions above those indicated in the operational sections of this specification is not implied or intended. Exposure to the absolute maximum rating conditions for extended periods may affect device reliability.

DC Electrical Characteristics

Applicable over recommended operating range from: TA = -40℃ to +105℃, VCC = +1.7V to +5.5V (unless otherwise noted)

Symbol	Parameter	Min.	Typ.	Max.	Unit	Test Condition
V_{CC}	Supply Voltage	1.7	-	5.5	V	
		1.8	-	5.5	V	
		2.5	-	5.5	V	
Isb	Standby Current	-	0.5	2.0	uA	Vcc = 3.3V, T_A = 85°C
		-	2.0	3.5	uA	Vcc = 5.5V, T_A = 85°C
		-	3.5	6.0	uA	Vcc = 5.5V, T_A = 105°C
I_{CC1}	Supply Current	-		0.5	mA	Vcc=5.5V, Read at 400Khz
I_{CC2}	Supply Current	-		2.5	mA	Vcc=5.5V Write at 400Khz
I_{LI}	Input Leakage Current	-	0.10	1.0	μA	V_{IN} = V_{CC} or Vss
I_{LO}	Output Leakage Current	-	0.05	1.0	μA	V_{OUT} = V_{CC} or Vss
V_{IL}	Input Low Level	–0.6	-	0.3V_{CC}	V	
V_{IH}	Input High Level	0.7V_{CC}	-	V_{CC}+0.5	V	
V_{OL1}	Output Low Level V_{CC} = 1.7V (SDA)	-	-	0.2	V	I_{OL} = 1.5 mA
V_{OL2}	Output Low Level V_{CC} = 3.0V (SDA)	-	-	0.4	V	I_{OL} = 2.1 mA

Table3

Pin Capacitance

Applicable over recommended operating range from TA = 25℃, f =1MHz, VCC = +5.0V

Parameter	Symbol	Min	Typ	Max	Unit	Condition
Input/Output Capacitance(SDA)	$C_{I/O}$	-	-	8	pF	V_{IO}=0V
Input Capacitance(A1,A2,SCL)	C_{IN}	-	-	6	pF	V_{IN}=0V

Table 4

AC Electrical Characteristics

Applicable over recommended operating range from TA = -40℃ to +105℃, VCC = +1.7V to +5.5V, CL = 1 TTL Gate and 100 pF (unless otherwise noted)

Symbol	Parameter	$1.7 \le V_{CC} \le 5.5$			$2.5 \le V_{CC} \le 5.5$			Units
		Min.	Typ.	Max.	Min.	Typ.	Max.	
f_{SCL}	Clock Frequency, SCL	-	-	400	-	-	1000	kHz
t_{LOW}	Clock Pulse Width Low	1.3	-	-	0.45	-	-	μs
t_{HIGH}	Clock Pulse Width High	0.65	-	-	0.4	-	-	μs
t_{AA}	Clock Low to Data Out Valid	0.05	-	0.9	0.05	-	0.55	μs
t_I	Noise Suppression Time	-	-	0.1	-	-	0.05	μs
t_{BUF}	Time the bus must be free before a new transmission can start	1.3	-	-	0.5	-	-	μs
$t_{HD.STA}$	Start Hold Time	0.65	-	-	0.2	-	-	μs
$t_{SU.STA}$	Start Setup Time	0.65	-	-	0.2	-	-	μs
$t_{HD.DAT}$	Data In Hold Time	0	-	-	0	-	-	μs
$t_{SU.DAT}$	Data In Setup Time	0.1	-	-	0.1	-	-	μs
t_R	Inputs Rise Time[1]	-	-	0.3	-	-	0.3	μs
t_F	Inputs Fall Time[1]	-	-	0.3	-	-	0.1	μs
$t_{SU.STO}$	Stop Setup Time	0.6	-	-	0.25	-	-	μs
t_{DH}	Data Out Hold Time	0.05	-	-	0.05	-	-	μs
$t_{SU.WP}$	WP pin Setup Time	1.3	-	-	0.6	-	-	μs
$t_{HD.WP}$	WP pin Hold Time	1.2	-	-	0.65	-	-	μs
t_{WR}	Write Cycle Time	-	-	5	-	-	5	ms

Table5

Notes:

1. This parameter is characterized and is not 100% tested.
2. AC measurement conditions:

   RL (connects to VCC): 1.3 k

   Input pulse voltages: 0.3 VCC to 0.7

   VCC Input rise and fall time: 50 ns

   Input and output timing reference voltages: 0.5 VCC

   The value of RL should be concerned according to the actual loading on the user's system.

Reliability Characteristic [1]

Symbol	Parameter	Min.	Typ.	Max.	Unit
EDR [2]	Endurance	1,000,000			Write cycles
EDR [3]	Endurance	1,000,000			Write cycles
EDR [4]	Endurance	500,000			Write cycles
DRET	Data retention	100			Years

Table6

Note: [1] This parameter is ensured by characterization and is not 100% tested

[2] Under the condition: 25°C, 3.3V, Page mode

[3] Under the condition: 85°C, 3.3V, Page mode

[4] Under the condition: 105°C, 3.3V, Page mode

Bus Timing

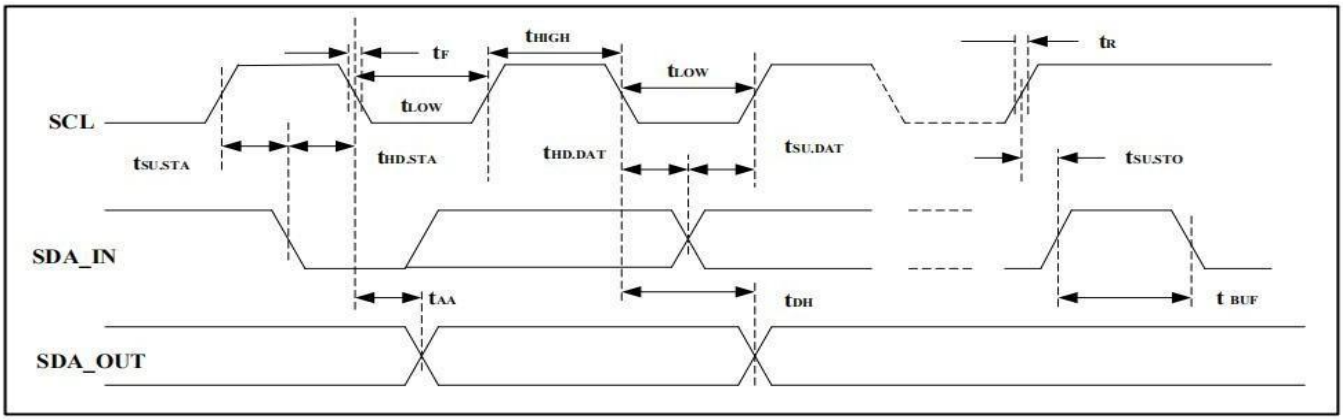

Write Cycle Timing

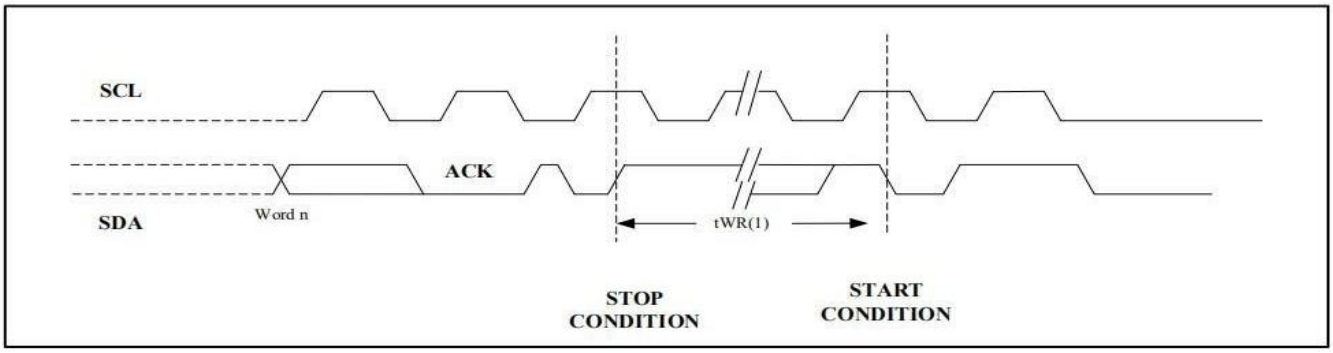

9.Package Information

9.1 PDIP Outline Dimensions

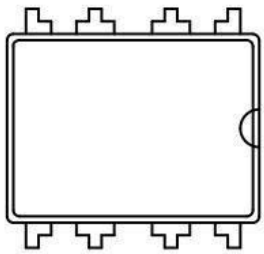

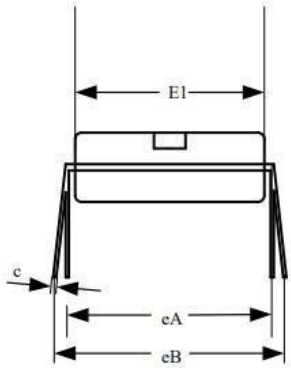

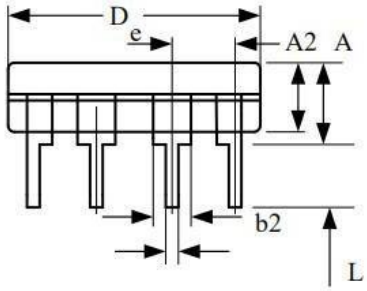

COMMON DIMENSIONS
(Unit of Measure=mm)

SYMBOL	MIN	NOM	MAX
A	3.60	3.80	4.00
A2	3.20	3.30	3.40
b	0.44	-	0.53
b2	1.52BSC		
c	0.24	-	0.32
D	9.05	9.25	9.45
E1	6.15	6.35	6.55
e	2.54BSC		
eA	7.62BSC		
eB	7.62	-	9.30
L	3.00BSC		

9.2 SOP

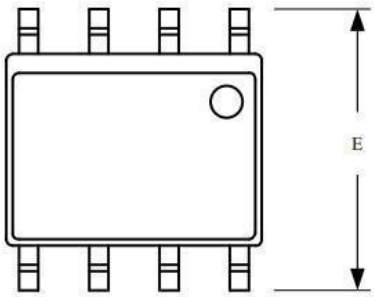

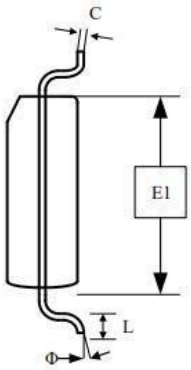

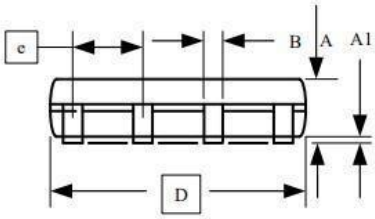

COMMON DIMENSIONS
(Unit of Measure=mm)

SYMBOL	MIN	NOM	MAX
A	1.35	-	1.75
A1	0.10	-	0.23
B	0.39	-	0.48
C	0.21	-	0.26
D	4.70	4.90	5.10
E1	3.70	3.90	4.10
E	5.80	6.00	6.20
e	1.27BSC		
L	0.50	-	0.80
Φ	0°	-	8°

9.3 TSSOP

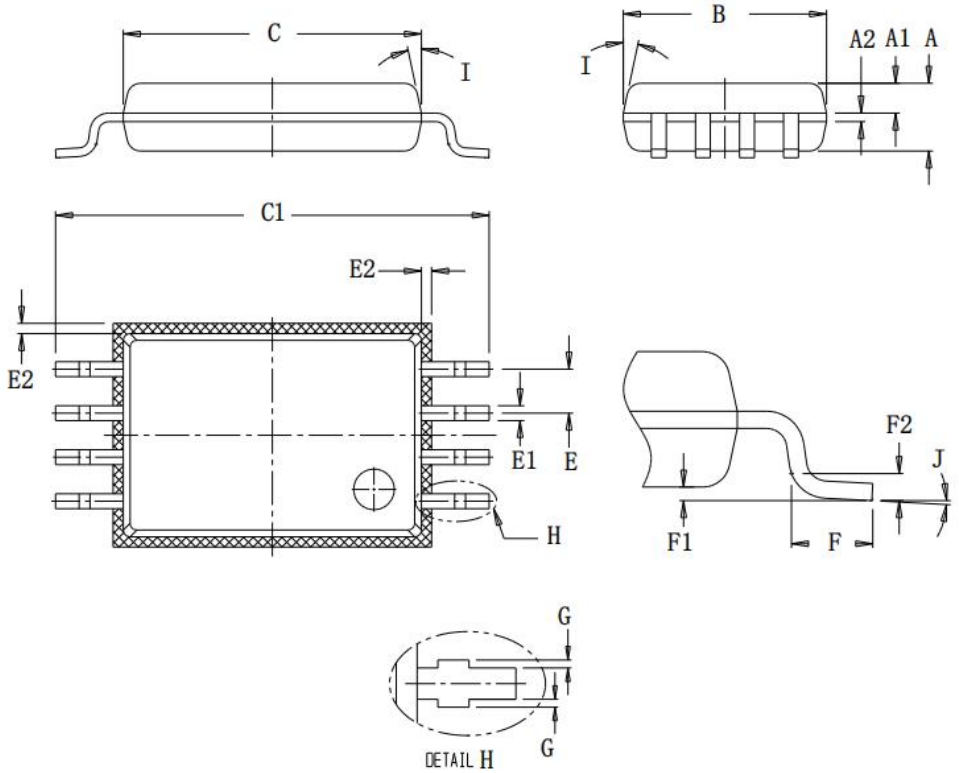

COMMON DIMENSIONS CUNITS MEASURE=MILLIMETER			
SYMBOL	MIN	NOM	MAX
A	0.95	1.00	1.05
A1	0.39	0.44	0.49
A2	-	0.127	-
B	2.95	3.00	3.05
C	4.35	4.40	4.45
C1	6.30	6.40	6.50
E	-	0.65TYP	-
E1	0.195	0.22	0.245
E2	-	0.12	-
F	0.5	0.60	0.7
F1	0	0.05	0.1
F2	-	0.2	-
G	-	0.075	-
I	10°	12°	14°
J	0°	3°	6°

9.4 SOT23-5L

SOT23-5L 12/14排框架

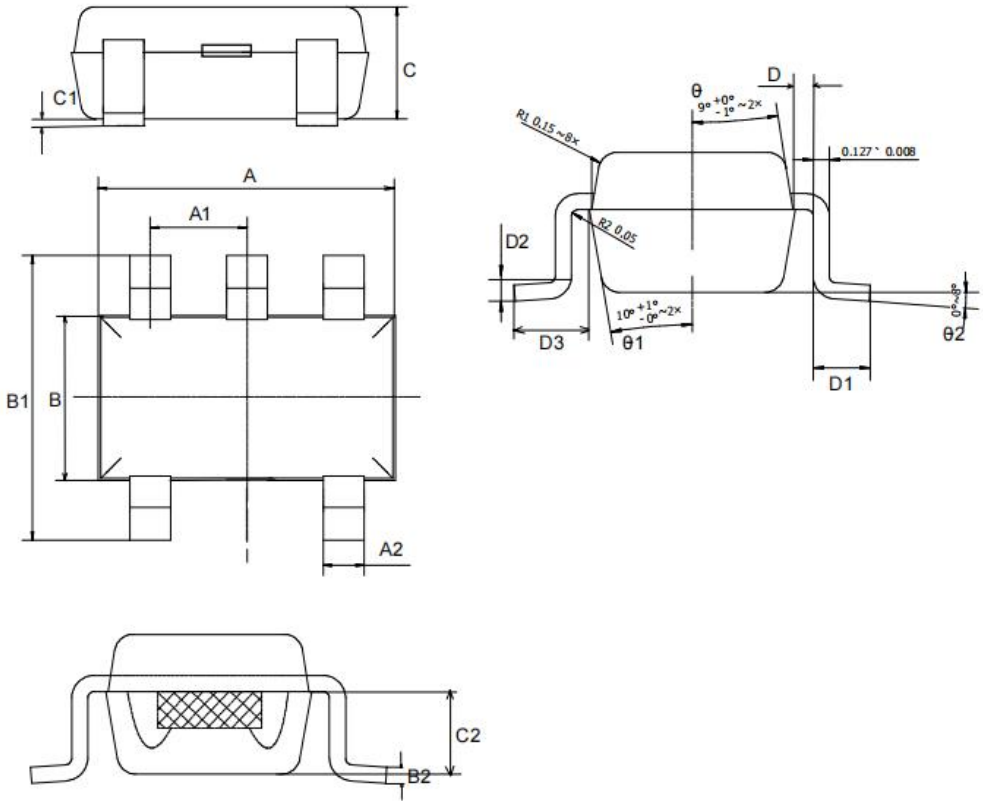

COMMON DIMENSIONS CUNITS MEASURE=MILLIMETER			
SYMBOL	MIN	NOM	MAX
A	2.82	2.92	3.02
A1	0.90	0.95	1.0
A2	0.33	0.40	0.43
B	1.52	1.62	1.72
B1	2.80	2.90	3.0
B2	0.12	0.128	0.135
C	1.05	1.10	1.15
C1	0.03	0.08	0.13
C2	0.6	0.65	0.7
D	0.03	0.08	0.13
D1	0.4	0.45	0.5
D2	0.25TYP		
D3	0.6	0.65	0.7

9.5 UDFN

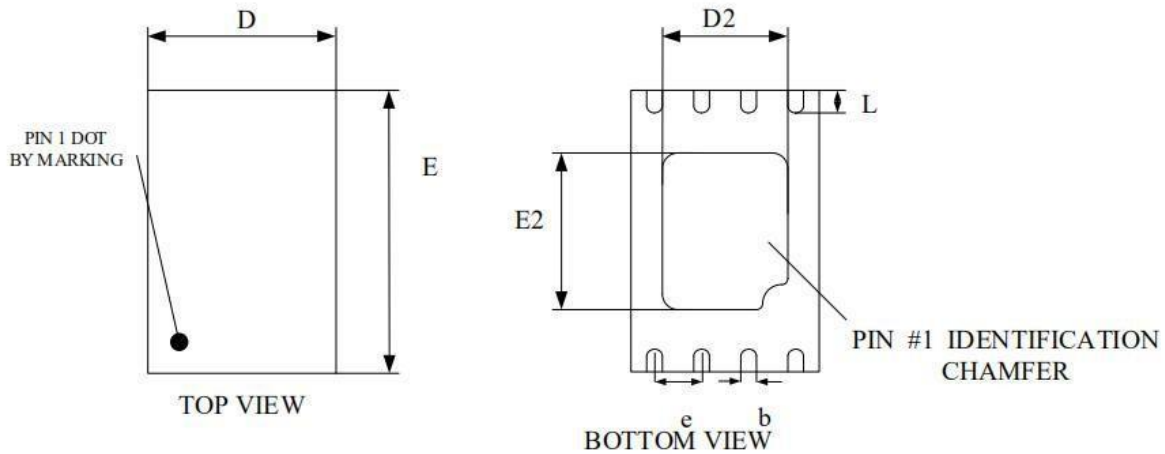

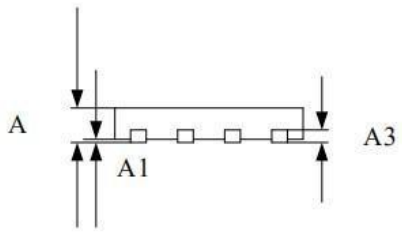

SIDE VIEW

COMMON DIMENSION(MM)			
PKG	UT:ULTRA THIN		
REF	MIN	NOM	MAX
A	0.50	0.55	0.60
A1	0.00	-	0.05
A3	0.15REF		
D	1.95	2.00	2.05
E	2.95	3.00	3.05
b	0.20	0.25	0.30
L	0.20	0.30	0.40
D2	1.25	1.40	1.50
E2	1.15	1.30	1.40
e	0.50BSC		

9.6 WLCSP

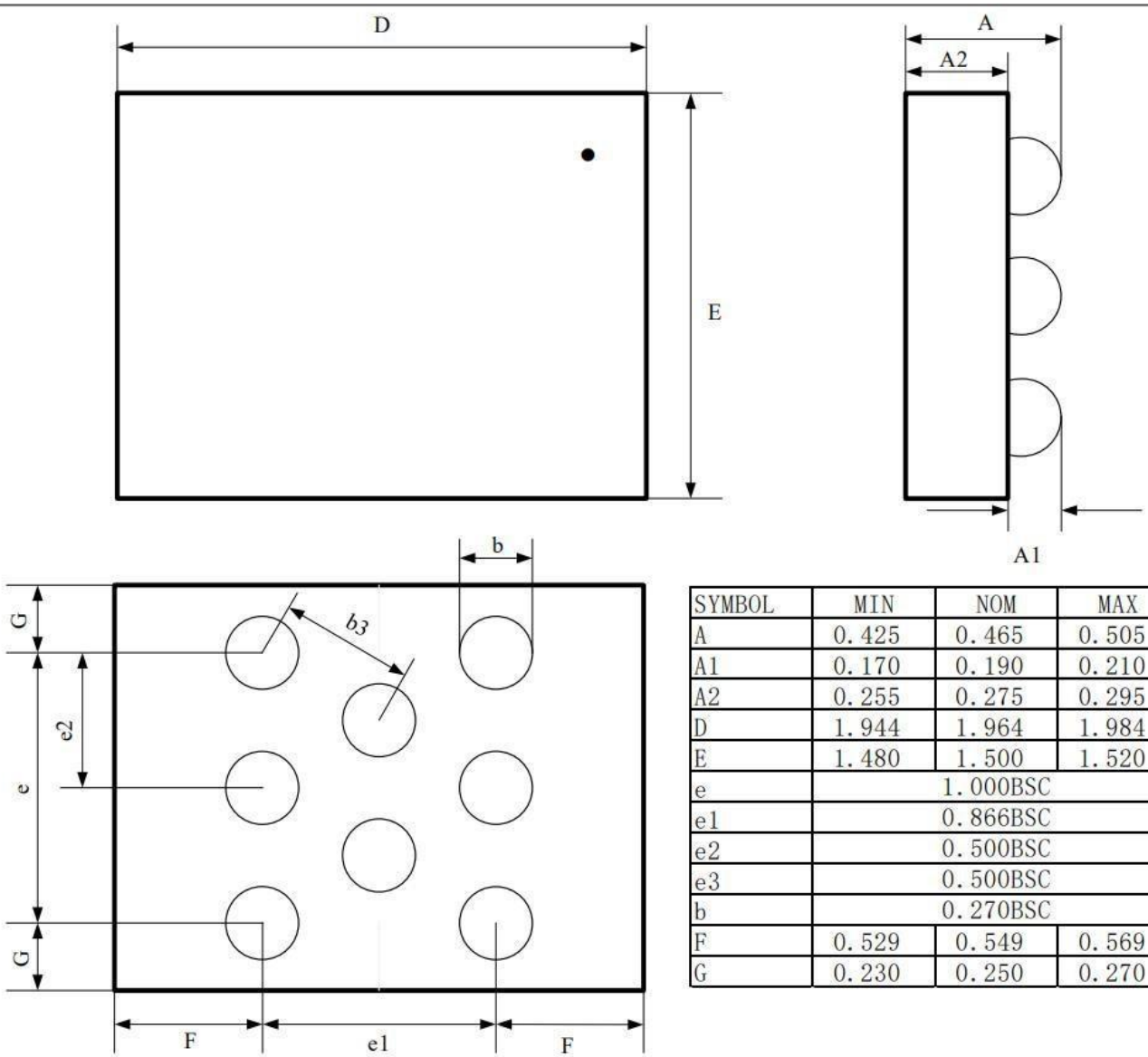

SYMBOL	MIN	NOM	MAX
A	0.425	0.465	0.505
A1	0.170	0.190	0.210
A2	0.255	0.275	0.295
D	1.944	1.964	1.984
E	1.480	1.500	1.520
e	1.000BSC		
e1	0.866BSC		
e2	0.500BSC		
e3	0.500BSC		
b	0.270BSC		
F	0.529	0.549	0.569
G	0.230	0.250	0.270

10.Ordering Information

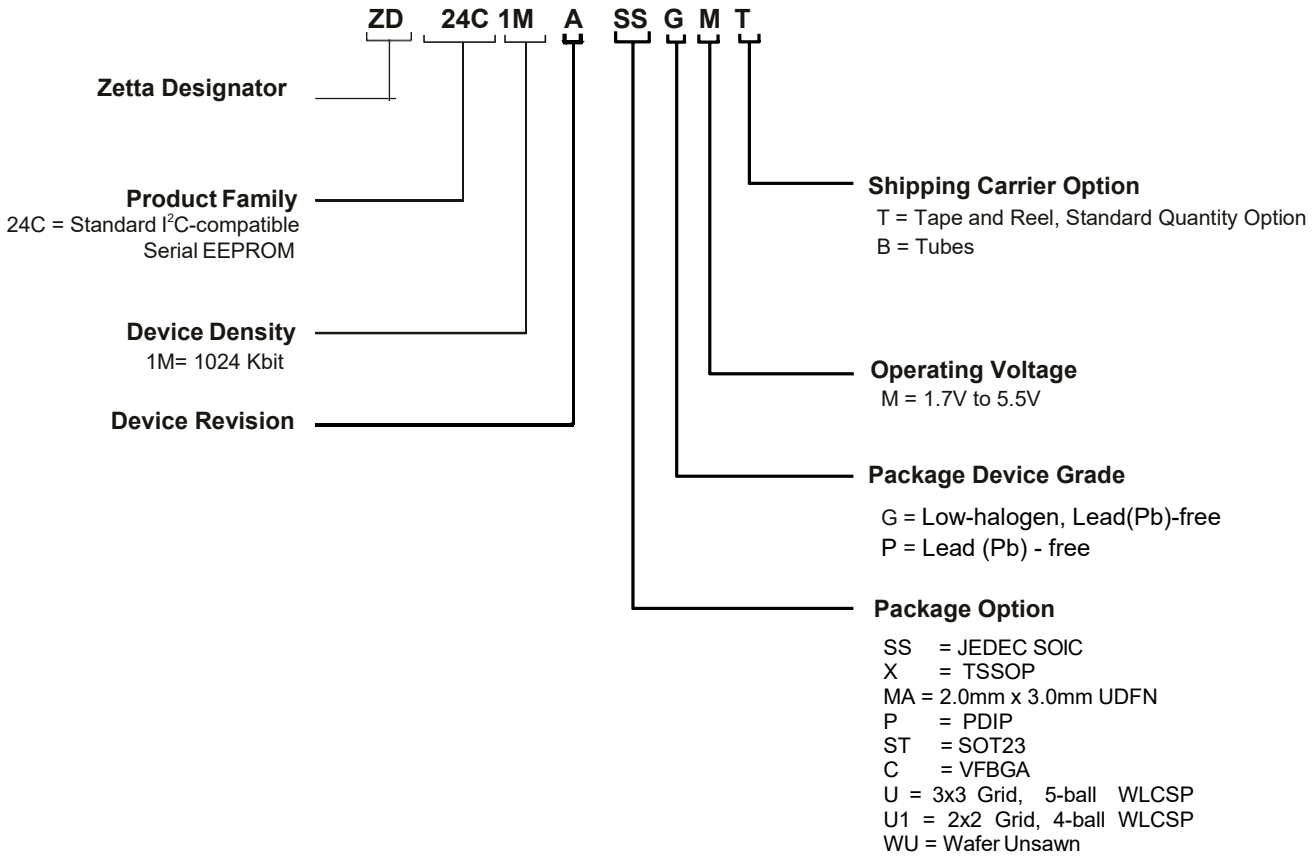

Revision History

Doc. No.	Date	Comments
Version 1.0	10/2020	Initial document release.
Version 1.1	01/2021	Update the Package Information.
Version 1.2	11/2022	Update AC/DC table.