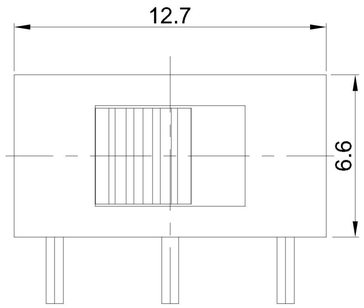

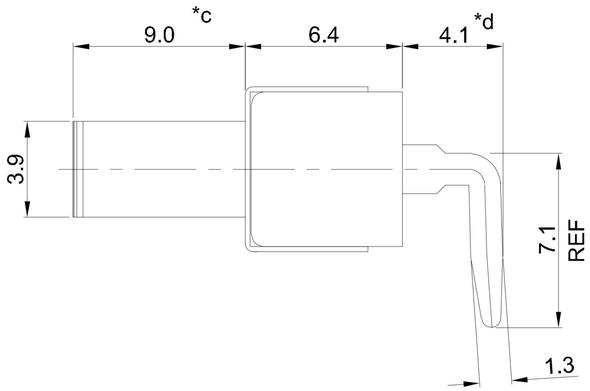

SS-12D06-G090

Vertical

G-Switch P/N

Switch Height (mm)
G020=2.0mm G030=3.0mm
G040=4.0mm G050=5.0mm
G060=6.0mm G070=3.0mm
G080=8.0mm G090=9.0mm
G100=10.0mm

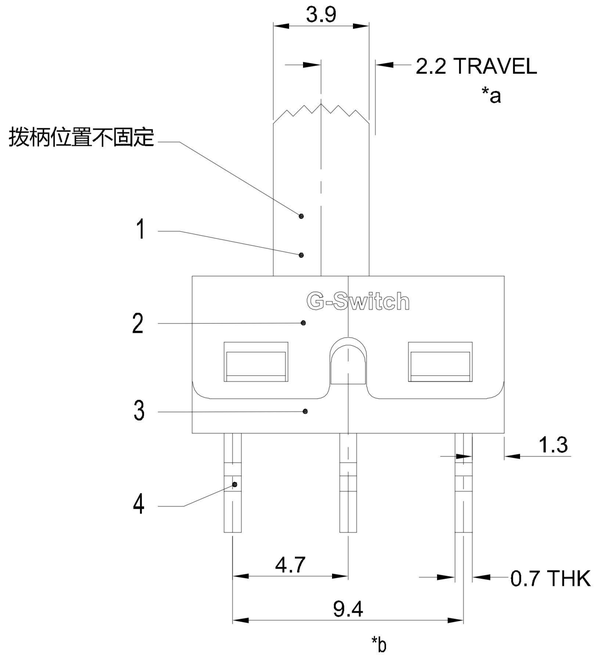

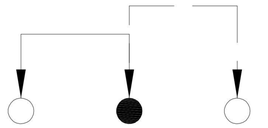

SCHEMATIC(NON-SHORTING)

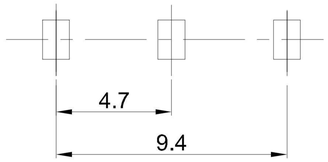

RECOMMENDED PCB LAYOUT
TOLERANCE:±0.05

G-Switch Specification:

1.Operating temperature range: -40°C ~ +85°C
2.Rating: 3.0A.250V DC
3.Insulation resistance: 100MΩ min.100V DC
4.Dielectric strength: 250V AC for 1 min
5.Contact resistance: 100m Ω max.
6.Terminals arrangement: 1P2T
7.Travel: 2.2±0.1mm
8.Switch lifetime: 10,000Cycles

NO.	PARTS	MATERIALS	Q'TY	FINISH
7	STEEL BALL	STEEL	1	NATURAL
6	SPRING	STEEL WIRE	1	NATURAL
5	CONTACT	BRASS STRIP	1	Ag PLATED
4	TERMINAL	BRASS STRIP	3	Ag PLATED
3	CASE	PA66	1	BLACK
2	COVER	SUS	1	NATURAL
1	KNOB	PA66	1	BLACK

Pb Process Capable

RoHS Compliant EU RoHS Standards

HALOGEN Compliant Halogen Free

SCALE: 1:1	UNIT: mm	Title:	Horizontal Slide Switch DIP12.7×6.6×6.4mm
SIZE: A4			
Unless otherwise General Tolerance:		Molde Code:	SK-12D06-G090

X	±0.40
X.x	±0.30
X.xx	±0.20
X°	±5°
X.x°	±3°

DRAWN	CHECKED	APPROVED	DATE
Xia	Chen	Chen	2023.02.01

品赞科技 G-Switch ®
www.dg-switch.com

REV: A0 SHEET: 1/1