REVISIONS					
REV.	ECN NO.	LOCATION	DESCRIPTION	DATE	DESIGN
A1	N/A			2024.12.9	
A2	ECN-P-2026031701	A2 X2		2026.03.16	

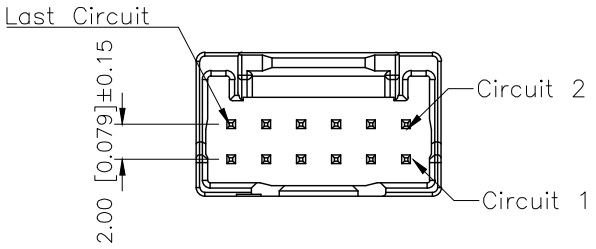

Specifications( )
1.Voltage rating( ):DC 250V
2.Current rating( ):3A AC/DC
3.Withstanding voltage( ):≥800V AC/minute A2
4.Insulation resistance( ):≥1000MΩ Min
5.Contact resistance( ):≤20mΩ Max
6.Temperature range( ):-40 ~+125

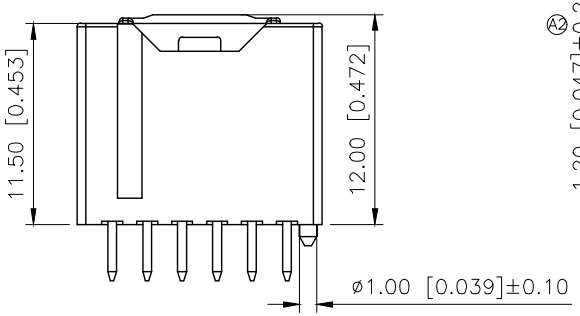

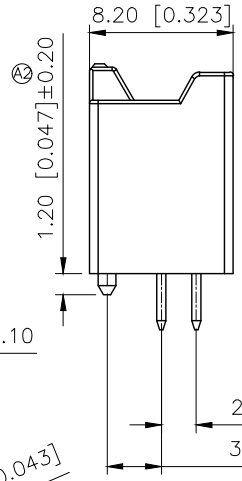

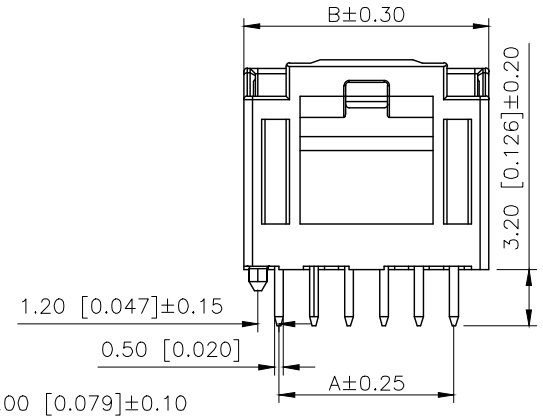

PART NO.:

X2081 W V-2x14-N0 SN

Series No
Category:W-Wafer
Welding Board Angle:V-Stright 180°
Row No.Pin No:2xXX-2X05~2x20P
Material:N0-PA66 UL94V-0
Plating:SN-Bright Tin Plated

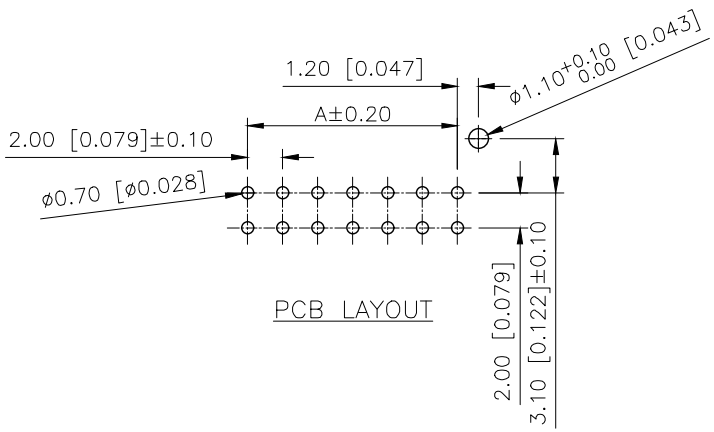

PCB LAYOUT

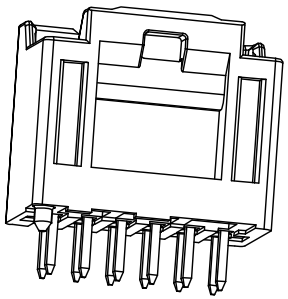

Poles	Dimensions(mm)		Poles	Dimensions(mm)	
	A	B		A	B
2x05	8.00	12.00	2x13	24.00	30.00
2x06	10.00	14.00	2x14	26.00	32.00
2x07	12.00	16.00	2x15	28.00	34.00
2x08	14.00	18.00	2x16	30.00	36.00
2x09	16.00	20.00	2x17	32.00	38.00
2x10	18.00	22.00	2x18	34.00	40.00
2x11	20.00	24.00	2x19	36.00	42.00
2x12	22.00	26.00	2x20	38.00	44.00

X2081WV-2x14-N0SN	PA66	Brass	X2081H
PART N0	Material	Material(Pin)	Suitable XKB Housing

AuGLAR	±5°
X.	±0.40
X.x	±0.30
X.xx	±0.20
X.xxx	±0.15
UNSPECIFIED TOLERAuCES	

XKB Connection 星创

DESIGN		VIEW:	MODEL TYPE: 2.0mm Crimp Style Connector
CHECKED		UNIT: mm/in	PART NO.: X2081WV-2x14-N0SN
APPROVED		SIZE: A4	DWG NO.:

XKB INDUSTRIAL PRECISION CO.,LIMITED

SCALE	PAGE	REVISION
N/A	1/1	A2