FREE HANGING PLUG PARTS

PART NUMBER	CIRCUIT SIZE	DIM 'A'	COLOR	TYPE
216945-3004	4	8.0	BLACK	FREE HANGING
216945-3006	6	11.5		
216945-3008	8	15.0		
216945-3010	10	18.5		
216945-3012	12	22.0		
216945-3014	14	25.5		
216945-3016	16	29.0		
216945-4004	4	8.0	NATURAL	
216945-4006	6	11.5		
216945-4008	8	15.0		
216945-4010	10	18.5		
216945-4012	12	22.0		
216945-4014	14	25.5		
216945-4016	16	29.0		

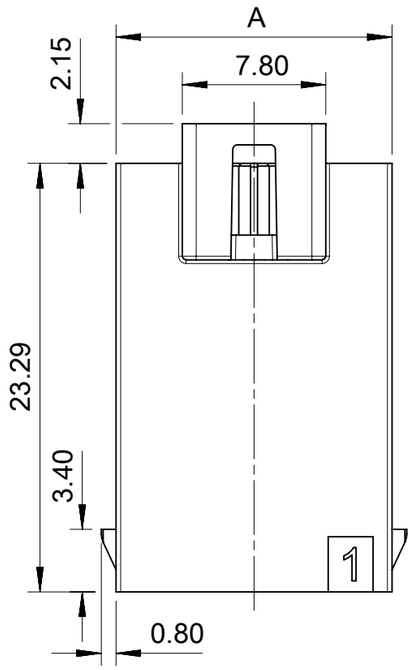

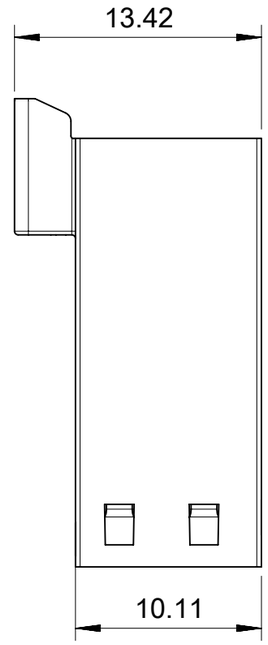

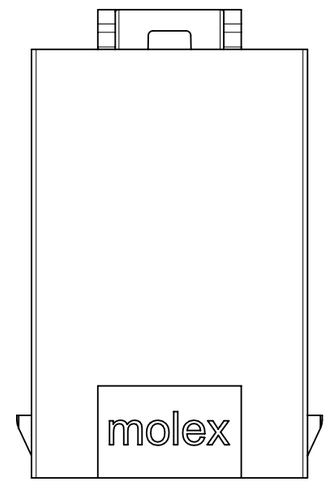

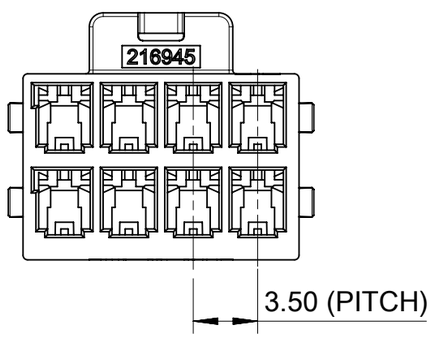

COLOR FEATURE

BLACK	NATURAL
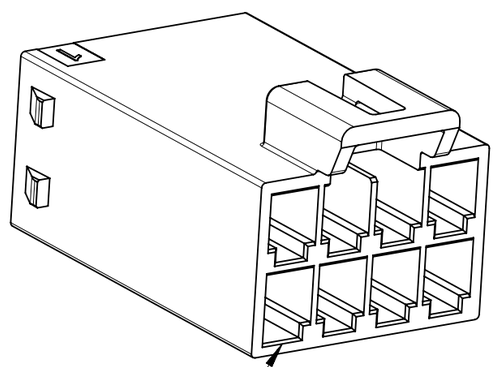	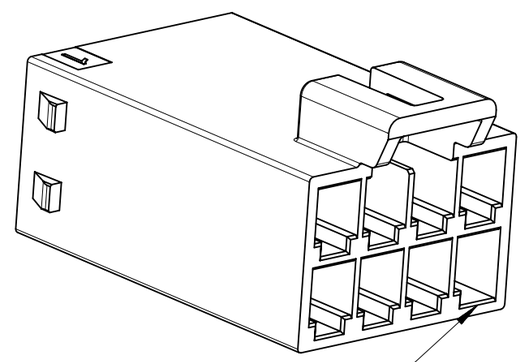
KEY A FOR BLACK COLOR PARTS	KEY B FOR NATURAL COLOR PARTS

NOTES:
1. MATERIAL:NYLON, 94V-0, BLACK AND NATURAL.
2. PRODUCT SPECIFICATION: 2169461000-PS.
3. PACKAGE SPECIFICATION: 2169451000-PK.
4. TO USE WITH TERMINAL OF 216946-****.
5. TO USE WITH TPA OF 172264-****.
6. TO MATE WITH RECEPTACLE OF 172258-****.
7. PARTS CONFORM TO CLASS 'B' REQUIREMENTS OF COSMETIC SPECIFICATION PS-45499-002.

THIS DRAWING CONTAINS INFORMATION THAT IS PROPRIETARY TO MOLEX ELECTRONIC TECHNOLOGIES, LLC AND SHOULD NOT BE USED WITHOUT WRITTEN PERMISSION

DIMENSION UNITS	SCALE
mm	NTS

GENERAL TOLERANCES (UNLESS SPECIFIED)

ANGULAR TOL	±	°
4 PLACES	±	
3 PLACES	±	
2 PLACES	±	0.2
1 PLACE	±	0.4
0 PLACES	±	

DRAFT WHERE APPLICABLE MUST REMAIN WITHIN DIMENSIONS

CURRENT REV DESC:

EC NO: 761697
DRWN: LEOW 2022/12/21
CHK'D: XQZHANG 2023/09/06
APPR: XQZHANG 2023/09/06

INITIAL REVISION:
DRWN: GLLI 2021/07/06
APPR: EDUGGER 2022/11/01

THIRD ANGLE PROJECTION | DRAWING: A3-SIZE | SERIES: 216945

molex

PLUG HOUSING OF ULTRA-FIT WTW DR POWER CONNECTOR

PRODUCT CUSTOMER DRAWING

DOCUMENT NUMBER	DOC TYPE	DOC PART	REVISION
2169451000-SD	PSD	000	A1

MATERIAL NUMBER	CUSTOMER	SHEET NUMBER
SEE TABLE	GENERAL MARKET	1 OF 6

DOCUMENT STATUS	P1	RELEASE DATE	2023/09/06 17:35:05

FORMAT: master-tb-prod-A3
REVISION: J1
DATE: 2021/05/01

FREE HANGING PLUG PARTS

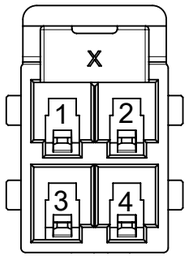

4CKT

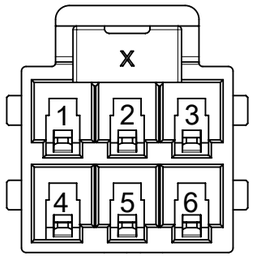

6CKT

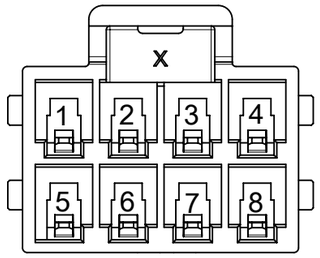

8CKT

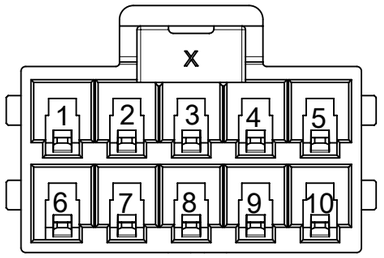

10CKT

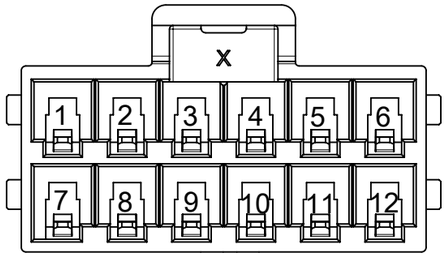

12CKT

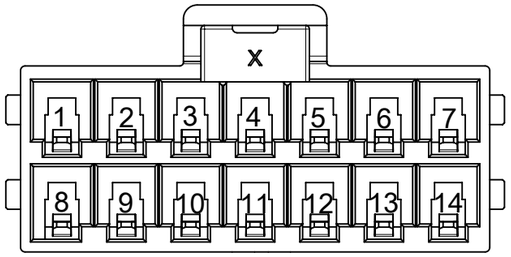

14CKT

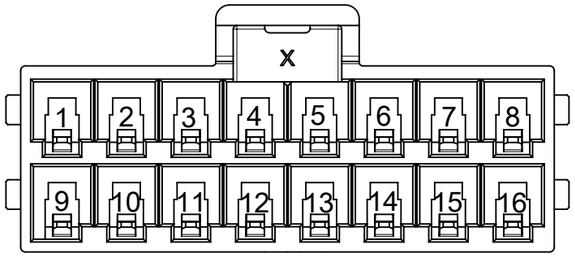

16CKT

THIS DRAWING CONTAINS INFORMATION THAT IS PROPRIETARY TO MOLEX ELECTRONIC TECHNOLOGIES, LLC AND SHOULD NOT BE USED WITHOUT WRITTEN PERMISSION

DIMENSION UNITS	SCALE
mm	NTS

GENERAL TOLERANCES (UNLESS SPECIFIED)

ANGULAR TOL	±	°
4 PLACES	±	
3 PLACES	±	
2 PLACES	±	0.2
1 PLACE	±	0.4
0 PLACES	±	

DRAFT WHERE APPLICABLE MUST REMAIN WITHIN DIMENSIONS

CURRENT REV DESC:

EC NO: 761697
DRWN: LEOW 2022/12/21
CHK'D: XQZHANG 2023/09/06
APPR: XQZHANG 2023/09/06

INITIAL REVISION:
DRWN: GLLI 2021/07/06
APPR: EDUGGER 2022/11/01

molex

PLUG HOUSING OF ULTRA-FIT WTW DR POWER CONNECTOR

PRODUCT CUSTOMER DRAWING

DOCUMENT NUMBER	DOC TYPE	DOC PART	REVISION
2169451000-SD	PSD	000	A1

THIRD ANGLE PROJECTION	DRAWING	SERIES	MATERIAL NUMBER	CUSTOMER	SHEET NUMBER
	A3-SIZE	216945	SEE TABLE	GENERAL MARKET	2 OF 6

DOCUMENT STATUS	P1	RELEASE DATE	2023/09/06 17:35:05

FORMAT: master-tb-prod-A3
REVISION: J1
DATE: 2021/05/01

FREE HANGING PLUG PARTS

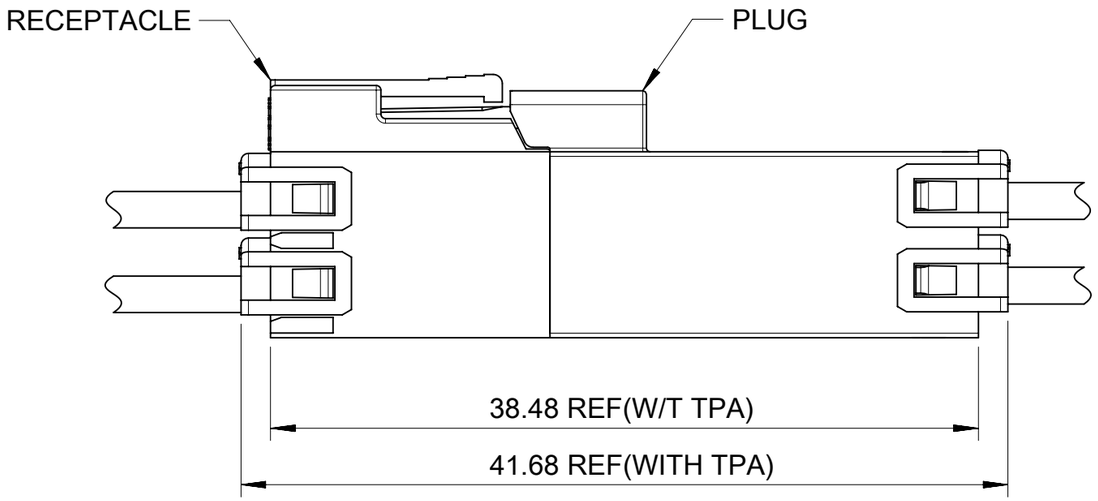

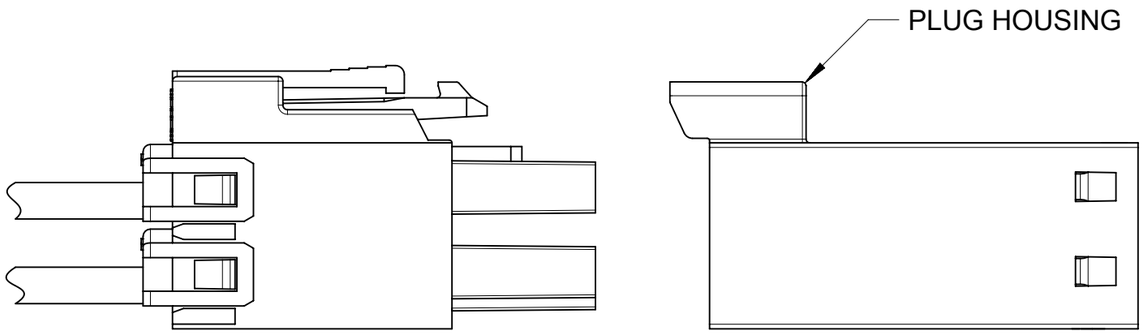

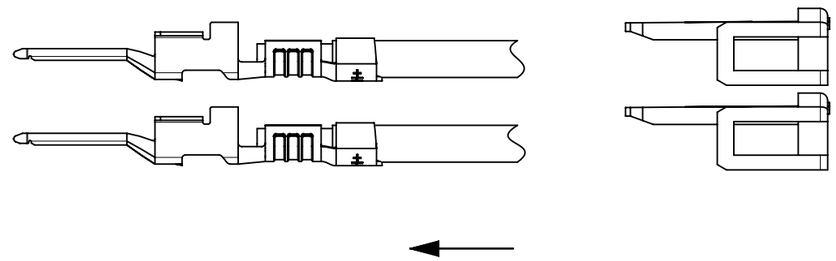

PLUG TERMINAL AND TPA ORIENTATION

THIS DRAWING CONTAINS INFORMATION THAT IS PROPRIETARY TO MOLEX ELECTRONIC TECHNOLOGIES, LLC AND SHOULD NOT BE USED WITHOUT WRITTEN PERMISSION

DIMENSION UNITS	SCALE
mm	NTS

GENERAL TOLERANCES (UNLESS SPECIFIED)		
ANGULAR TOL	±	°
4 PLACES	±	
3 PLACES	±	
2 PLACES	±	0.2
1 PLACE	±	0.4
0 PLACES	±	

DRAFT WHERE APPLICABLE MUST REMAIN WITHIN DIMENSIONS

CURRENT REV DESC:

EC NO: 761697
DRWN: LEOW 2022/12/21
CHK'D: XQZHANG 2023/09/06
APPR: XQZHANG 2023/09/06

INITIAL REVISION:
DRWN: GLLI 2021/07/06
APPR: EDUGGER 2022/11/01

molex

PLUG HOUSING OF ULTRA-FIT WTW DR POWER CONNECTOR

PRODUCT CUSTOMER DRAWING

DOCUMENT NUMBER	DOC TYPE	DOC PART	REVISION
2169451000-SD	PSD	000	A1

THIRD ANGLE PROJECTION	DRAWING	SERIES	MATERIAL NUMBER	CUSTOMER	SHEET NUMBER
	A3-SIZE	216945	SEE TABLE	GENERAL MARKET	3 OF 6

DOCUMENT STATUS	P1	RELEASE DATE	2023/09/06 17:35:05

FORMAT: master-tb-prod-A3
REVISION: J1
DATE: 2021/05/01

PANEL MOUNT PLUG PARTS

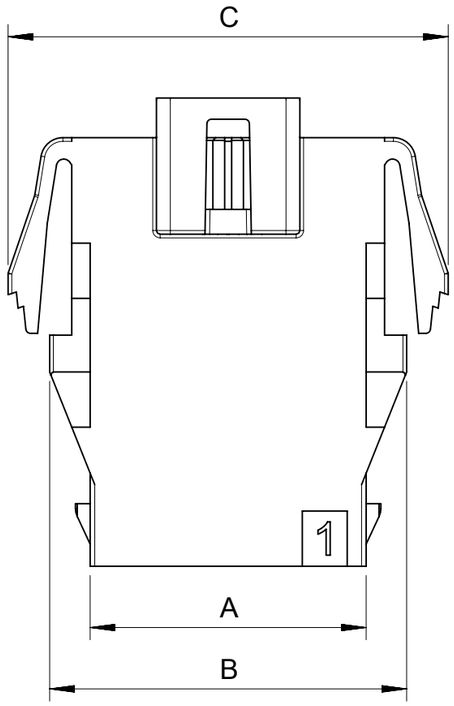

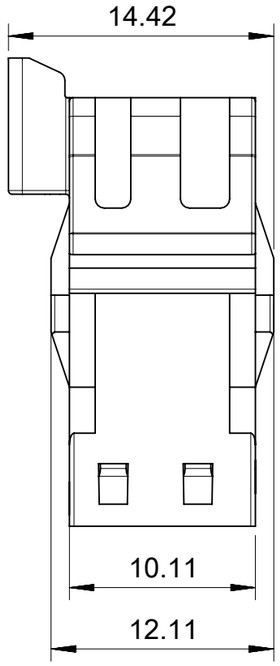

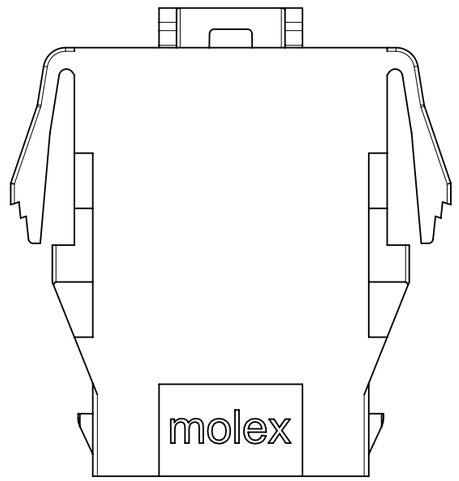

PART NUMBER	CIRCUIT SIZE	DIM 'A'	DIM 'B'	DIM 'C'	COLOR	TYPE
216945-3104	4	8.0	12.4	16.92	BLACK	PANEL MOUNT
216945-3106	6	11.5	15.9	20.42		
216945-3108	8	15.0	19.4	23.92		
216945-3110	10	18.5	22.9	27.42		
216945-3112	12	22.0	26.4	30.92		
216945-3114	14	25.5	29.9	34.42		
216945-3116	16	29.0	33.4	37.92		
216945-4104	4	8.0	12.4	16.92	NATURAL	
216945-4106	6	11.5	15.9	20.42		
216945-4108	8	15.0	19.4	23.92		
216945-4110	10	18.5	22.9	27.42		
216945-4112	12	22.0	26.4	30.92		
216945-4114	14	25.5	29.9	34.42		
216945-4116	16	29.0	33.4	37.92		

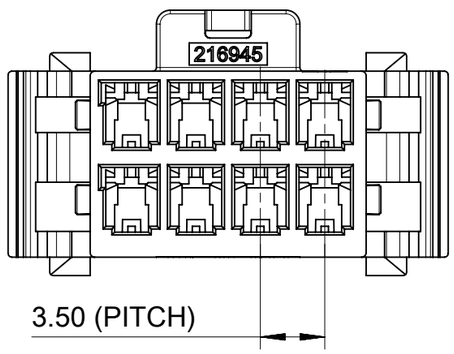

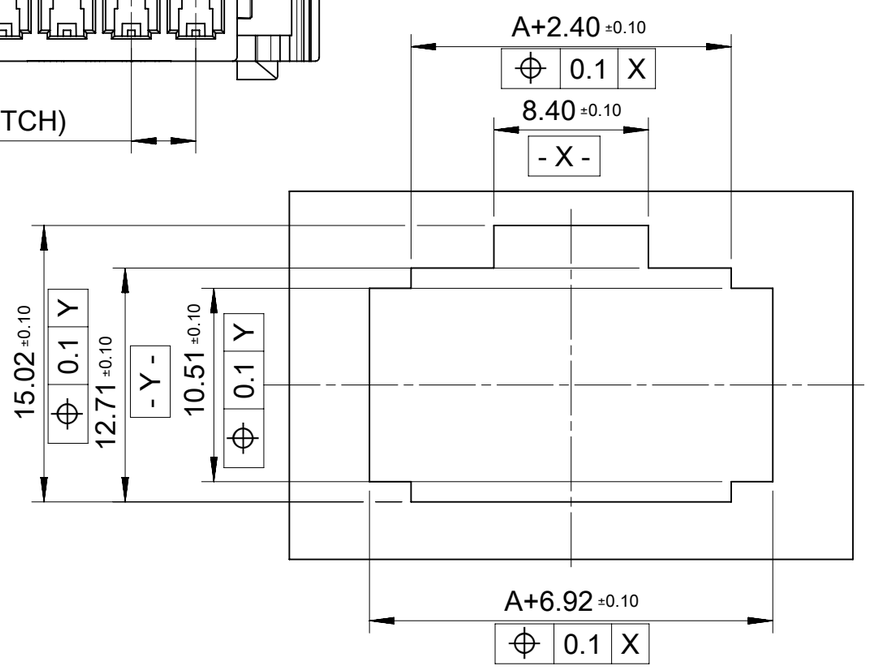

RECOMMENDED PANEL CUT OUT
(TOLERRANCE +/-0.05 THICKNESS=1.2~2.0MM)

COLOR FEATURE

BLACK	NATURAL
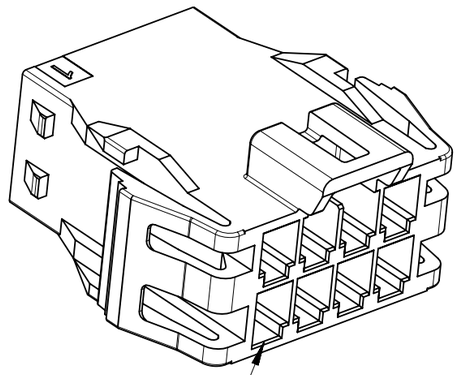	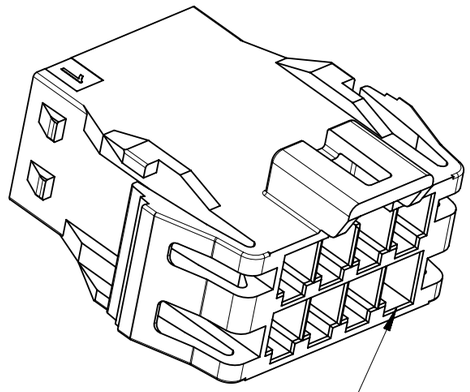
KEY A FOR BLACK COLOR PARTS	KEY B FOR NATURAL COLOR PARTS

THIS DRAWING CONTAINS INFORMATION THAT IS PROPRIETARY TO MOLEX ELECTRONIC TECHNOLOGIES, LLC AND SHOULD NOT BE USED WITHOUT WRITTEN PERMISSION

DIMENSION UNITS	SCALE
mm	NTS

GENERAL TOLERANCES (UNLESS SPECIFIED)

ANGULAR TOL	±	°
4 PLACES	±	
3 PLACES	±	
2 PLACES	±	0.2
1 PLACE	±	0.4
0 PLACES	±	

DRAFT WHERE APPLICABLE MUST REMAIN WITHIN DIMENSIONS

CURRENT REV DESC:

EC NO: 761697
DRWN: LEOW 2022/12/21
CHK'D: XQZHANG 2023/09/06
APPR: XQZHANG 2023/09/06

INITIAL REVISION:
DRWN: GLLI 2021/07/06
APPR: EDUGGER 2022/11/01

THIRD ANGLE PROJECTION | DRAWING: A3-SIZE | SERIES: 216945

molex

PLUG HOUSING OF ULTRA-FIT WTW DR POWER CONNECTOR

PRODUCT CUSTOMER DRAWING

DOCUMENT NUMBER	DOC TYPE	DOC PART	REVISION
2169451000-SD	PSD	000	A1

MATERIAL NUMBER	CUSTOMER	SHEET NUMBER
SEE TABLE	GENERAL MARKET	4 OF 6

DOCUMENT STATUS	P1	RELEASE DATE	2023/09/06 17:35:05

FORMAT: master-tb-prod-A3
REVISION: J1
DATE: 2021/05/01

PANEL MOUNT PLUG PARTS

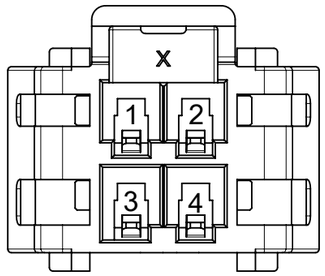

4 CKT

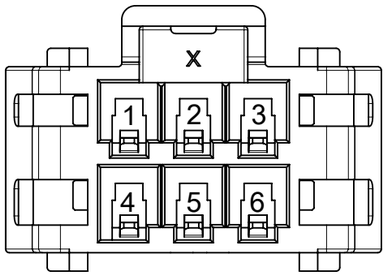

6 CKT

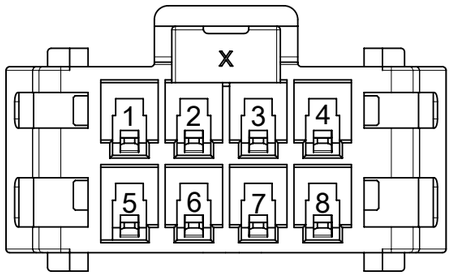

8 CKT

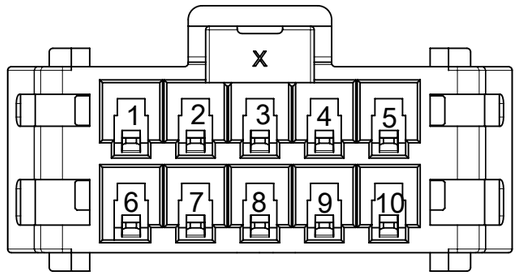

10 CKT

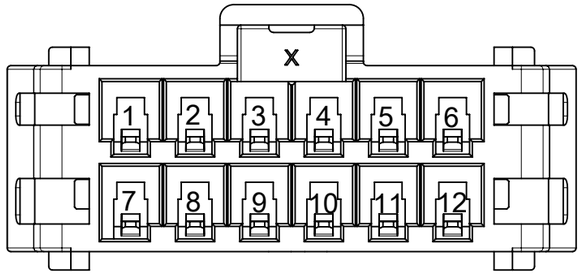

12 CKT

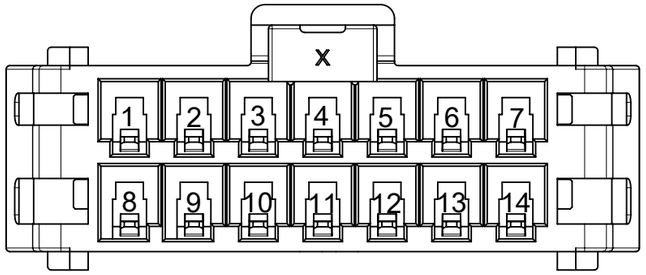

14 CKT

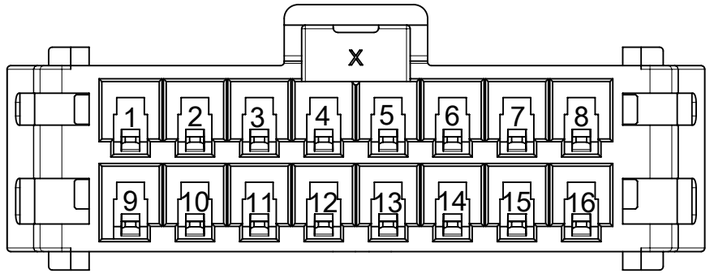

16 CKT

THIS DRAWING CONTAINS INFORMATION THAT IS PROPRIETARY TO MOLEX ELECTRONIC TECHNOLOGIES, LLC AND SHOULD NOT BE USED WITHOUT WRITTEN PERMISSION

DIMENSION UNITS	SCALE
mm	NTS

GENERAL TOLERANCES (UNLESS SPECIFIED)		
ANGULAR TOL	±	°
4 PLACES	±	
3 PLACES	±	
2 PLACES	±	0.2
1 PLACE	±	0.4
0 PLACES	±	

DRAFT WHERE APPLICABLE MUST REMAIN WITHIN DIMENSIONS

CURRENT REV DESC:

EC NO: 761697
DRWN: LEOW 2022/12/21
CHK'D: XQZHANG 2023/09/06
APPR: XQZHANG 2023/09/06

INITIAL REVISION:
DRWN: GLLI 2021/07/06
APPR: EDUGGER 2022/11/01

THIRD ANGLE PROJECTION | DRAWING: A3-SIZE | SERIES: 216945

molex

PLUG HOUSING OF ULTRA-FIT WTW DR POWER CONNECTOR

PRODUCT CUSTOMER DRAWING

DOCUMENT NUMBER	DOC TYPE	DOC PART	REVISION
2169451000-SD	PSD	000	A1

MATERIAL NUMBER	CUSTOMER	SHEET NUMBER
SEE TABLE	GENERAL MARKET	5 OF 6

DOCUMENT STATUS	P1	RELEASE DATE	2023/09/06 17:35:05

FORMAT: master-tb-prod-A3
REVISION: J1
DATE: 2021/05/01

PANEL MOUNT PLUG PARTS

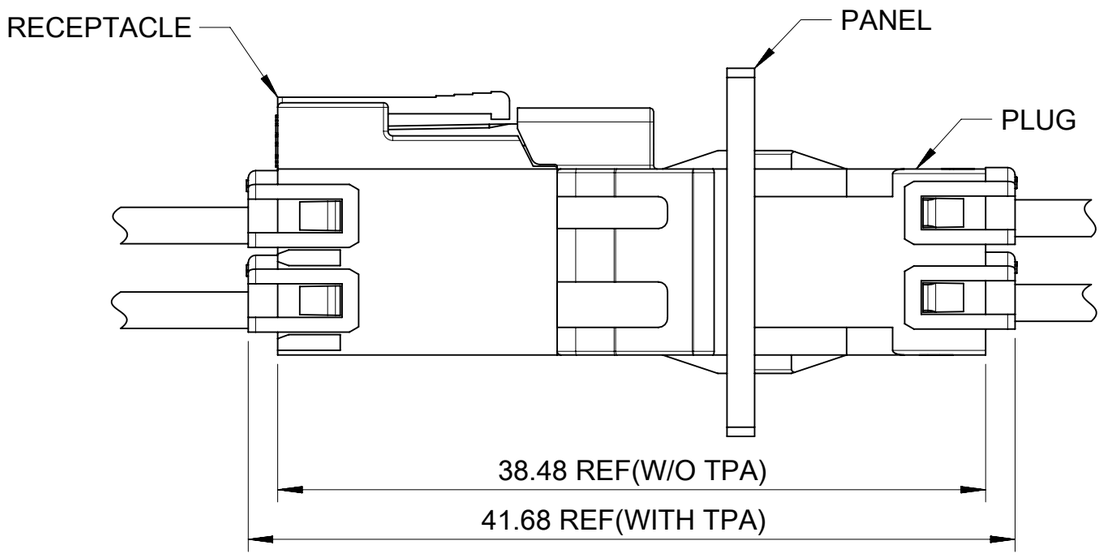

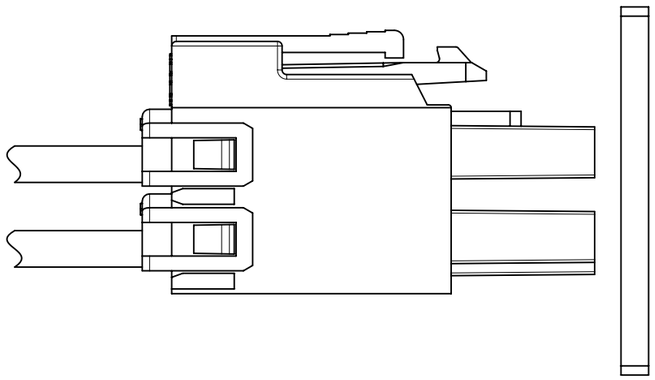

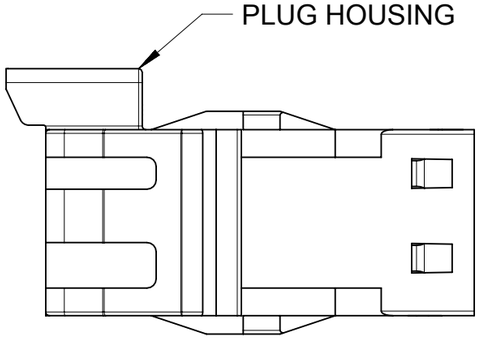

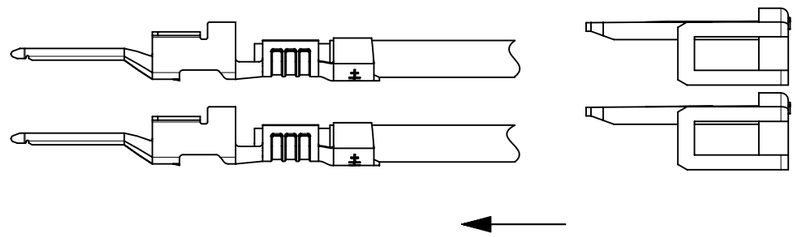

PLUG TERMINAL AND TPA ORIENTATION

THIS DRAWING CONTAINS INFORMATION THAT IS PROPRIETARY TO MOLEX ELECTRONIC TECHNOLOGIES, LLC AND SHOULD NOT BE USED WITHOUT WRITTEN PERMISSION

DIMENSION UNITS	SCALE
mm	NTS

GENERAL TOLERANCES (UNLESS SPECIFIED)		
ANGULAR TOL	±	°
4 PLACES	±	
3 PLACES	±	
2 PLACES	±	0.2
1 PLACE	±	0.4
0 PLACES	±	

DRAFT WHERE APPLICABLE MUST REMAIN WITHIN DIMENSIONS

CURRENT REV DESC:

EC NO: 761697
DRWN: LEOW 2022/12/21
CHK'D: XQZHANG 2023/09/06
APPR: XQZHANG 2023/09/06

INITIAL REVISION:
DRWN: GLLI 2021/07/06
APPR: EDUGGER 2022/11/01

THIRD ANGLE PROJECTION | DRAWING: A3-SIZE | SERIES: 216945

molex

PLUG HOUSING OF ULTRA-FIT WTW DR POWER CONNECTOR

PRODUCT CUSTOMER DRAWING

DOCUMENT NUMBER	DOC TYPE	DOC PART	REVISION
2169451000-SD	PSD	000	A1

MATERIAL NUMBER	CUSTOMER	SHEET NUMBER
SEE TABLE	GENERAL MARKET	6 OF 6

DOCUMENT STATUS	P1	RELEASE DATE	2023/09/06 17:35:05

FORMAT: master-tb-prod-A3
REVISION: J1
DATE: 2021/05/01