RoHS compliant
by exemption

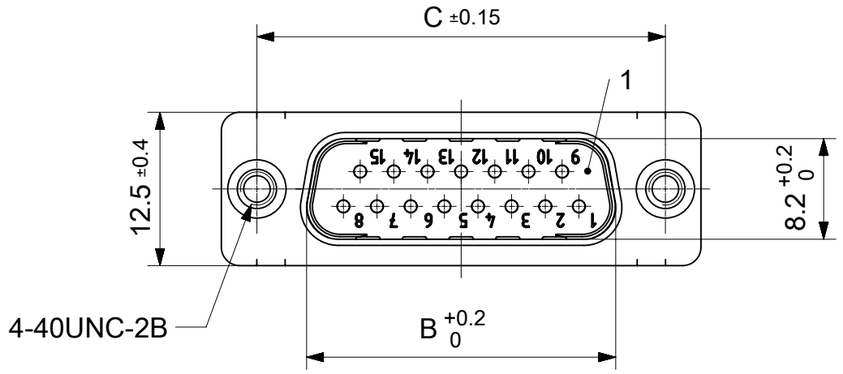

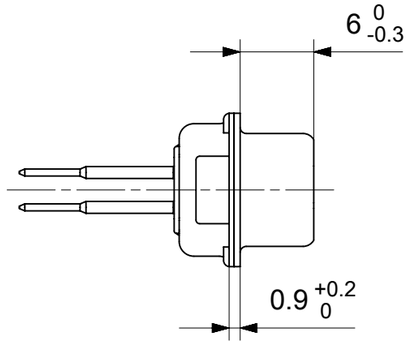

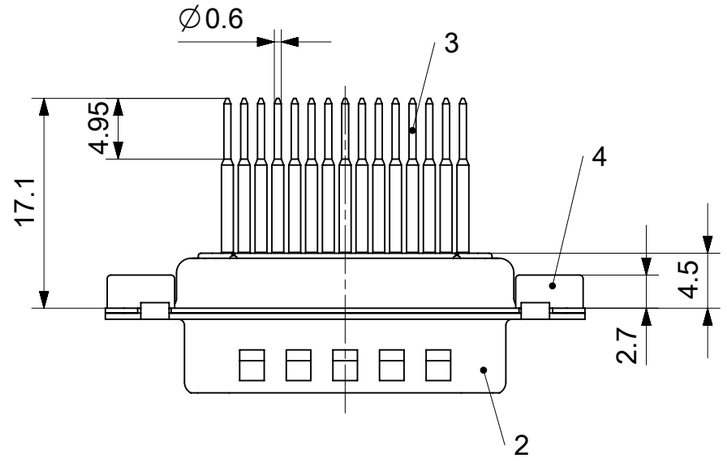

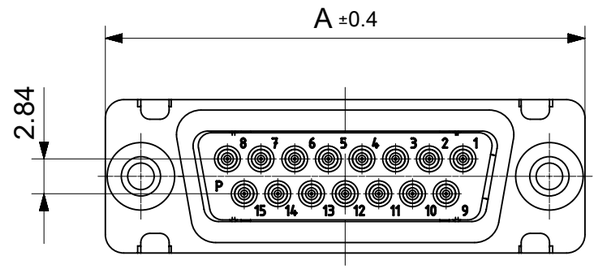

FCT Part number:

FTxx*1)P80G1

e.g. FT15P80G1

*1) xx No. of contacts 09, 15, 25 or 37

*2) y for performance classes 1, 2 or 3
(contact cycle for G1/G2/G3 = 500/200/50)

Material Number	xx*1)	y*2)	A[mm]	B[mm]	C[mm]	*E[mm]
1731090973	09	G1	30.8	16.9	25	∅1
-	15	-	39.1	25.2	33.3	
-	25	-	53	38.9	47.04	
-	37	-	69.3	55.3	63.5	

*PCB hole patterns ∅E see document 2195600023

No.	Pc.	Part	Type Description/Material	Surface plating/ Color/Class
4	2	Clinch nut	FT 4-40 / Steel	tin plated
3	xx	Signal contact	P80 / Brass	G1
2	1	Shell	Steel	tin plated
1	1	Insulator	PBT (-55°C to +125°C) acc. UL94V-0	white

MEASUREMENTS WITHOUT TOLERANCE ACC TO ISO 2768-m

REPLACEMENT FOR DOCUMENT NUMBER: FTxxP80Gy

THIS DRAWING CONTAINS INFORMATION THAT IS PROPRIETARY TO MOLEX ELECTRONIC TECHNOLOGIES, LLC AND SHOULD NOT BE USED WITHOUT WRITTEN PERMISSION

FUNCTIONAL SYMBOLS: FA = 0, FC = 0, FP = 0

DIVISIONAL SYMBOLS

DIMENSION UNITS: mm | SCALE: 2:1

GENERAL TOLERANCES (UNLESS SPECIFIED)

ANGULAR TOL	± °
4 PLACES	±
3 PLACES	±
2 PLACES	±
1 PLACE	±
0 PLACES	±

DRAFT WHERE APPLICABLE MUST REMAIN WITHIN DIMENSIONS

CURRENT REV DESC:

EC NO: 712793
DRWN: SUGEEB 2021/12/15
CHK'D: MTEUBEL 2022/07/04
APPR: MTEUBEL 2022/07/04

INITIAL REVISION:
DRWN: SUGEEB 2021/12/15
APPR: MTEUBEL 2022/07/04

FIRST ANGLE PROJECTION | DRAWING: A3-SIZE | SERIES: 173109

molex

FCT D-SUB MINIATURE CONNECTOR

PRODUCT CUSTOMER DRAWING

DOCUMENT NUMBER	DOC TYPE	DOC PART	REVISION
1731090973	PSD	000	A

MATERIAL NUMBER	CUSTOMER	SHEET NUMBER
SEE TABLE	GENERAL MARKET	1 OF 1

DOCUMENT STATUS	P1	RELEASE DATE	2022/07/04 12:31:00

FORMAT: master_tb_mod-A3
REVISION: J1
DATE: 2021/05/04

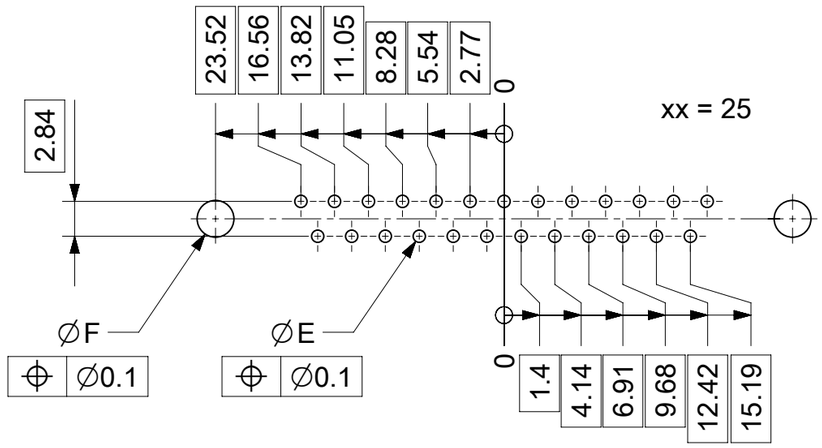

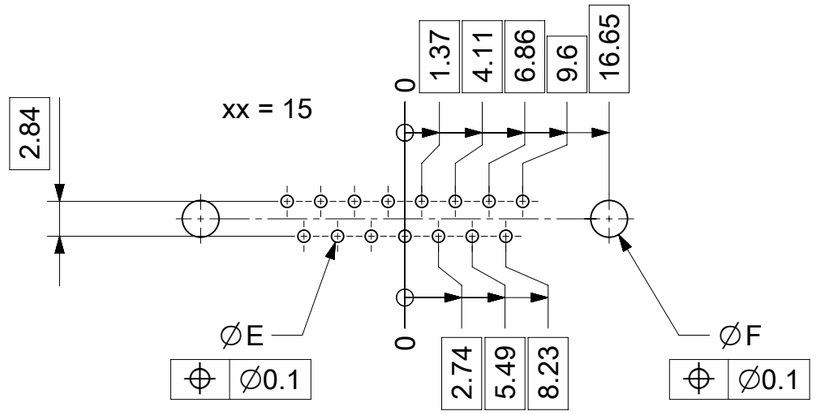

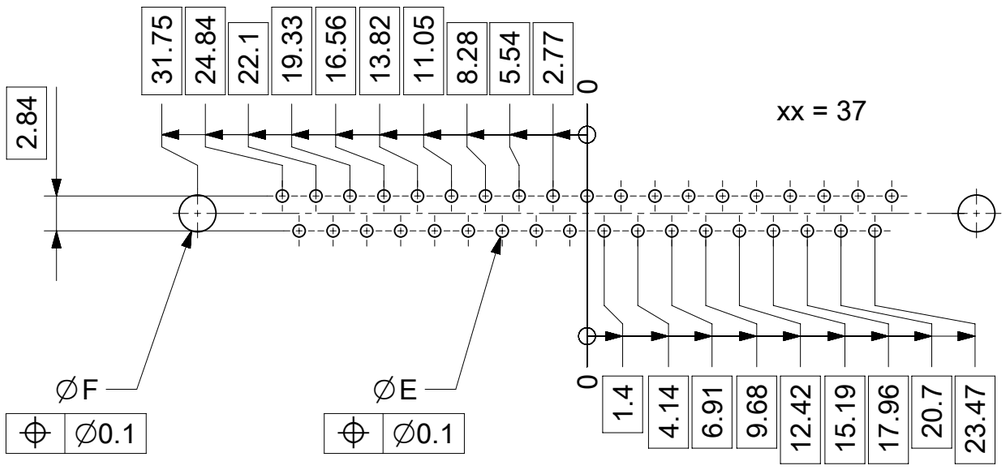

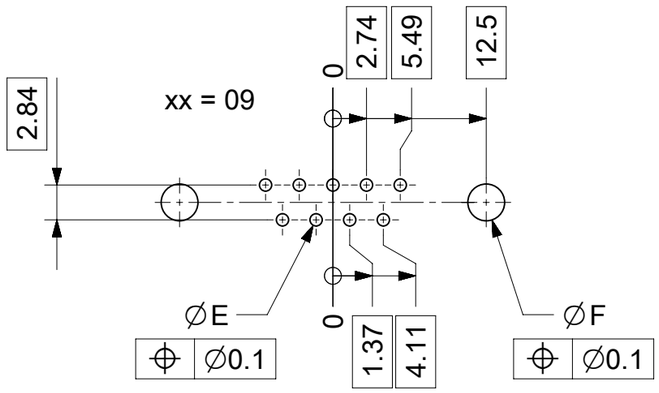

øE, øF see data sheet incl. connector
øF connectors with accessories only

MEASUREMENTS WITHOUT TOLERANCE ACC TO ISO 2768-m

REPLACEMENT FOR DOCUMENT NUMBER: AM0023

THIS DRAWING CONTAINS INFORMATION THAT IS PROPRIETARY TO MOLEX ELECTRONIC TECHNOLOGIES, LLC AND SHOULD NOT BE USED WITHOUT WRITTEN PERMISSION

FUNCTIONAL SYMBOLS: FA = 0, FC = 0, FP = 0

DIVISIONAL SYMBOLS

DIMENSION UNITS	SCALE
mm	2:1

GENERAL TOLERANCES (UNLESS SPECIFIED)

ANGULAR TOL	± °
4 PLACES	±
3 PLACES	±
2 PLACES	±
1 PLACE	±
0 PLACES	±

DRAFT WHERE APPLICABLE MUST REMAIN WITHIN DIMENSIONS

CURRENT REV DESC:

EC NO: 713905
DRWN: SKANDB 2022/05/16
CHK'D: MTEUBEL 2022/07/12
APPR: MTEUBEL 2022/07/12

INITIAL REVISION:
DRWN: SKANDB 2022/05/16
APPR: MTEUBEL 2022/07/12

FIRST ANGLE PROJECTION

DRAWING	SERIES
A3-SIZE	219560

molex

FCT PCB HOLE PATTERN STRAIGHT CONTACT
NO. OF CONTACTS 09-37

PRODUCT CUSTOMER DRAWING

DOCUMENT NUMBER	DOC TYPE	DOC PART	REVISION
2195600023	PSD	000	A

MATERIAL NUMBER	CUSTOMER	SHEET NUMBER
219560	GENERAL MARKET	1 OF 1

DOCUMENT STATUS	P1	RELEASE DATE	2022/07/12 08:25:55

FORMAT: master-tb-mod-A3
REVISION: J1
DATE: 2021/05/01