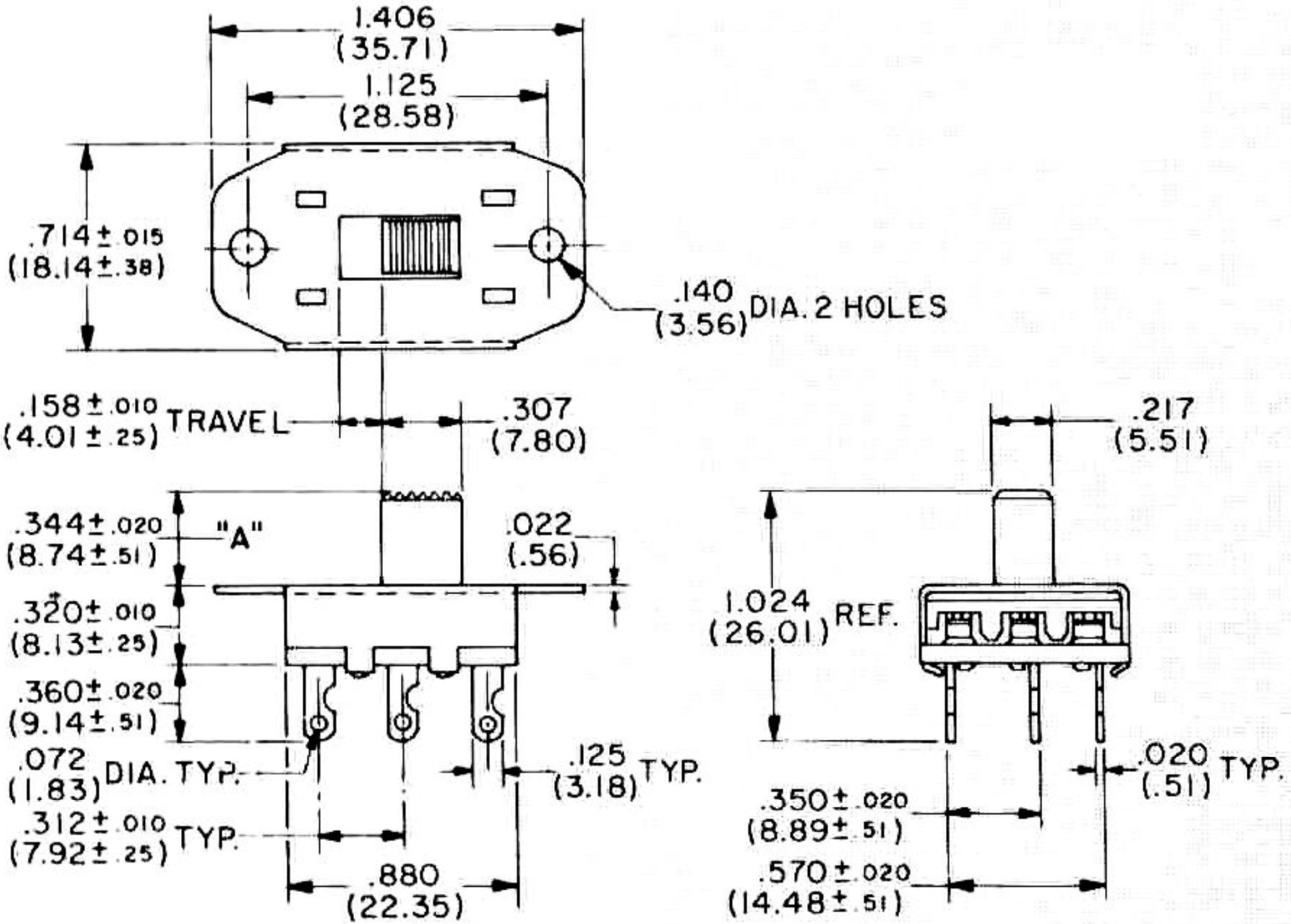
1.406
(35.71)
1.125
(28.58)
.714 ± .015
(18.14 ± .38)
.140
(3.56) DIA. 2 HOLES
.158 ± .010
(4.01 ± .25) TRAVEL
.307
(7.80)
.217
(5.51)
.344 ± .020
(8.74 ± .51)
"A"
.022
(.56)
.320 ± .010
(8.13 ± .25)
1.024
(26.01) REF.
.360 ± .020
(9.14 ± .51)
.072
(1.83) DIA. TYP.
.125
(3.18) TYP.
.020
(.51) TYP.
.312 ± .010
(7.92 ± .25) TYP.
.350 ± .020
(8.89 ± .51)
.880
(22.35)
.570 ± .020
(14.48 ± .51)