REVISIONS					
REV.	ECN NO.	LOCATION	DESCRIPTION	DATE	DESIGN
A1	N/A		图面升级整理图面	2024.11.11	阿树
A2	ECN-P-2026031301	A2 X2	产品尺寸变更	2026.03.12	阿树

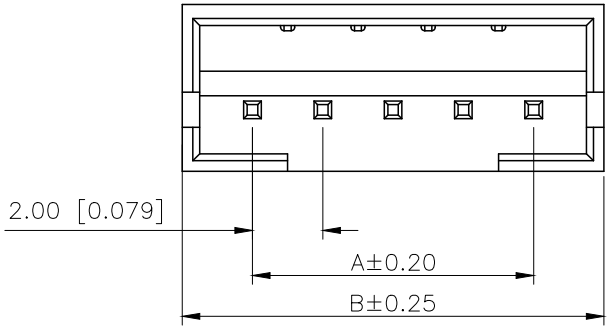

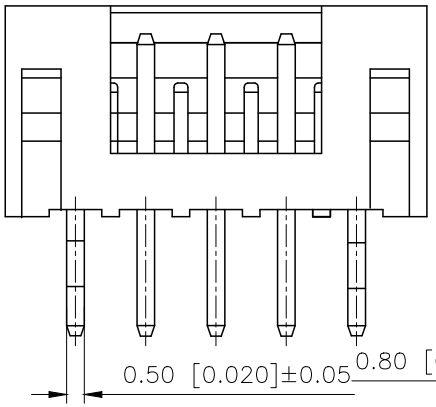

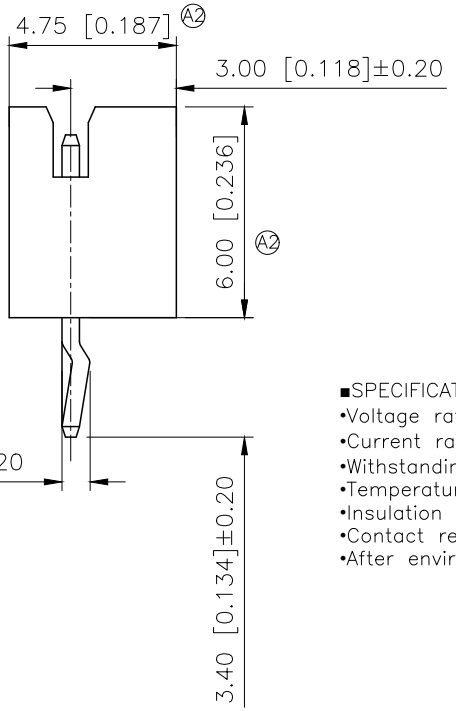

D:\??\??????\??????\X2016\X2016WV-XX-46SN\PDF Images\PH2.0177165170a.png

PART NO.:

X2016 W V-04 K-N0 SN
① ② ③ ④ ⑤ ⑥ ⑦

①Series No
②Category:W-Wafer
③Welding Board Angle:V-Stright 180°
④Row No.Pin No:XX-02~20Pin
⑤Special No.:K-Kink;
⑥Material: N0-PA66 UL 94V-0
⑦Plating Category: SN-Bright tin Plating

■SPECIFICATIONS
- Voltage rating:250V AC/DC
- Current rating:2A AC/DC
- Withstanding Voltage:800V AC/minute
- Temperature range:-40°C~+125°C
- Insulation resistance:≥1000MΩ
- Contact resistance: ≤20mΩ
- After environment testing: ≤30mΩ

Poles	Dimensions(mm)		Poles	Dimensions(mm)	
	A	B		A	B
2	2.00	6.00	12	22.00	26.00
3	4.00	8.00	13	24.00	28.00
4	6.00	10.00	14	26.00	30.00
5	8.00	12.00	15	28.00	32.00
6	10.00	14.00	16	30.00	34.00
7	12.00	16.00	17	32.00	36.00
8	14.00	18.00	18	34.00	38.00
9	16.00	20.00	19	36.00	40.00
10	18.00	22.00	20	38.00	42.00
11	20.00	24.00			

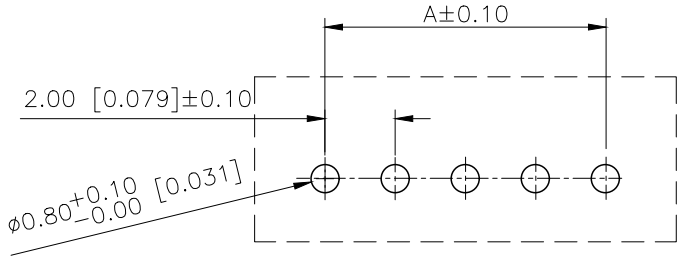

P.C.B LAYOUT

X2016WV-04K-N0SN	Nylon 66 UL 94V-0	Brass	Tin-Plated	X2016H
PART NO	Material	Material(Pin)	Finish(Pin)	Suitable XKB Terminal

AuGLAR	±5°
X.	±0.40
X.x	±0.30
X.xx	±0.20
X.xxx	±0.15
UNSPECIFIED TOLERAuCES	

XKB 星创 Connection

DESIGN	阿树	VIEW:	MODEL TYPE: 2.00mm Crimp Style Connectors
CHECKED		UNIT: mm/in	PART NO.: X2016WV-04K-N0SN
APPROVED		SIZE: A4	DWG NO.:

XKB INDUSTRIAL PRECISION CO.,LIMITED

SCALE	PAGE	REVISION
N/A	1/1	A2