REVISIONS					
REV.	ECN NO.	LOCATION	DESCRIPTION	DATE	DESIGN
A1	N/A		图面升级整理图面	2025.2.12	阿树
A2	N/A	A2 X2	产品开孔尺寸变更	2025.12.31	阿树

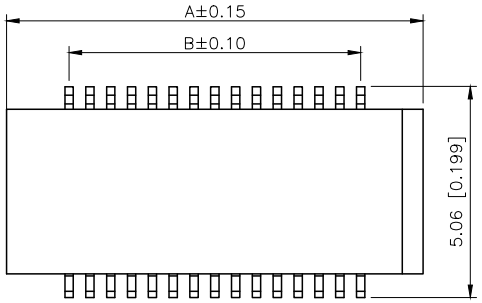

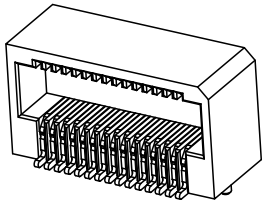

3D VIEW

Specifications:
规格：
Voltage rating:50V AC/DC
额定电压：50V AC/DC
Current rating:0.5A AC/DC
额定电流：0.5A AC/DC
Withstanding voltage:200V AC/minute
耐受电压：200V AC/分钟
Temperature range:−40℃−+85℃
温度范围：−40℃−+85℃
Insulation resistance:100MΩ min
绝缘电阻：100MΩ Min
Contact resistance:55mΩ Max
接触电阻：55mΩ Max

PART NO.:

X0509 F R S−24 A S−LP V01
① ② ③ ④ ⑤ ⑥ ⑦ ⑧ ⑨

①Series No
②Category:F−Female
③Welding Board Angle:R−Stright 90°
④Welding Way: S−SMT
⑤Row No.Pin No:XX−04−80P
⑥Female Height:A=3.95 ,
Mating Height 5.0mm
⑦Special No:S−With positioning Columm
⑧Material:LP−LCP UL94V−0
⑨Plating:V01−Gold Flash

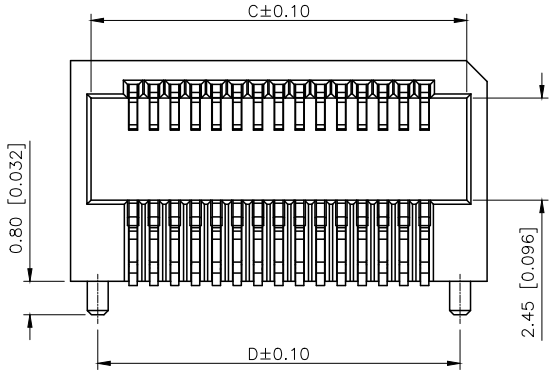

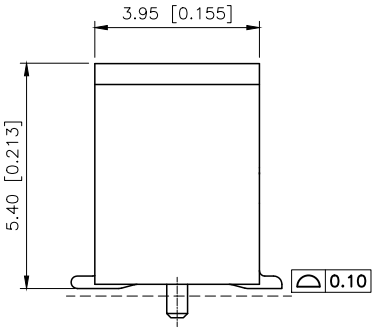

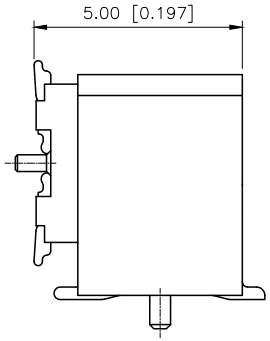

Mating Height :5.0

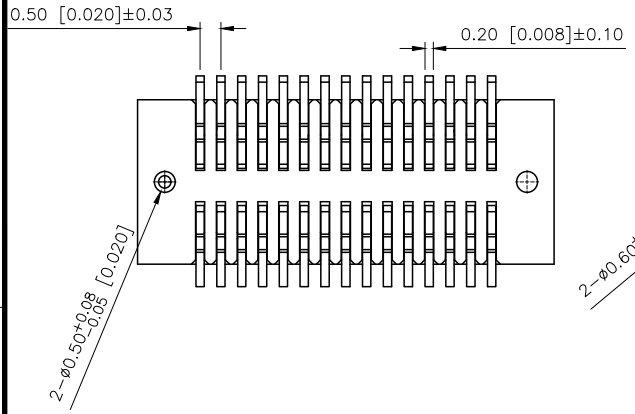

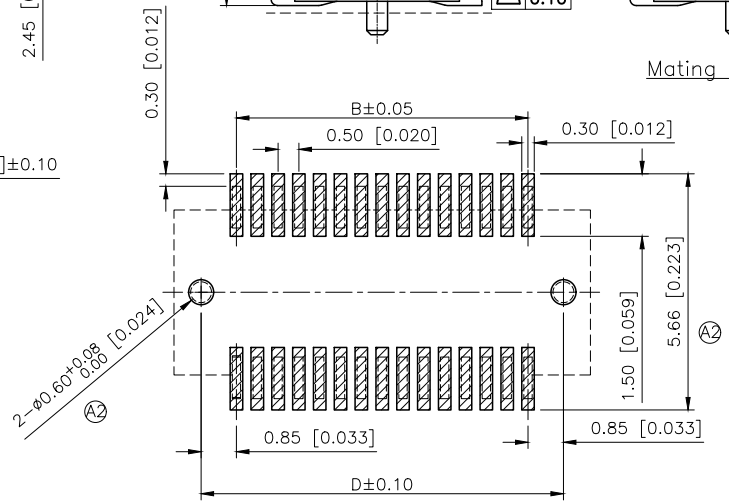

Recommended PCB
Layout(±0.05)

X0509FRS−24AS−LPV01	LCP	Brass Gold Flash	X0509W
PART NO	Material	Material(Pin)	Suitable XKB Wafer

Poles	Dimensions(mm)				Poles	Dimensions(mm)			
	A	B	C	D		A	B	C	D
4	3.50	0.50	2.52	2.20	32	10.50	7.50	9.52	9.20
6	4.00	1.00	3.02	2.70	34	11.00	8.00	10.20	9.70
8	4.50	1.50	3.52	3.20	36	11.50	8.50	10.52	10.20
10	5.00	2.00	4.02	3.70	38	12.00	9.00	11.02	10.70
12	5.50	2.50	4.52	4.20	40	12.50	9.50	11.52	11.20
14	6.00	3.00	5.02	4.70	42	13.00	10.00	12.02	11.70
16	6.50	3.50	5.52	5.20	44	13.50	10.50	12.52	12.20
18	7.00	4.00	6.02	5.70	46	14.00	11.00	13.02	12.70
20	7.50	4.50	6.52	6.20	48	14.50	11.50	13.52	13.20
22	8.00	5.00	7.02	6.70	50	15.00	12.00	14.02	13.70
24	8.50	5.50	7.52	7.20	52	15.50	12.50	14.54	14.20
26	9.00	6.00	8.02	7.70	60	17.50	14.50	16.52	16.20
28	9.50	6.50	8.52	8.20	70	20.00	17.00	19.02	18.70
30	10.00	7.00	9.02	8.70	80	22.50	19.50	21.52	21.20

AuGLAR	±5°
X.	±0.40
X.x	±0.30
X.xx	±0.20
X.xxx	±0.15
UNSPECIFIED TOLERAuCES	

XKB 星硕 Connection

DESIGN	阿树	VIEW:	MODEL TYPE: 0.5mm BTB Style Connector
CHECKED		UNIT: mm/in	PART NO.: X0509FRS−24AS−LPV01
APPROVED		SIZE: A4	DWG NO.: X−X0509FRS−24AS−LPV01

XKB INDUSTRIAL PRECISION CO.,LIMITED

SCALE	PAGE	REVISION
N/A	1/1	A2