SIGN	DATE	DESCRIPTION	APPROVER
1	2009.5.13	The design is changed	Jacke
2	2009.5.13	The voltage rating and withstanding Voltage are changed	Jacke
3	2009.5.13	The Operating temperature is changed	Jacke
4	2009.5.13	Add UL standard	Jacke
5	11/21'09	The normal grey No. changed from RAL7004/P to RAL7035/D	Kind
6	03/17'10	Add the 2P mark	RUNNER
7	05/22'10	Structure changed	RUNNER
8	09/01'10	The design is changed	RUNNER

THIS IS CAD DRAWING, DO NOT REVISE MANUALLY!!!

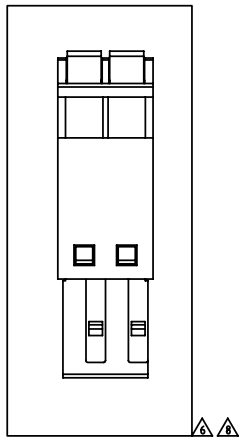

2P mark

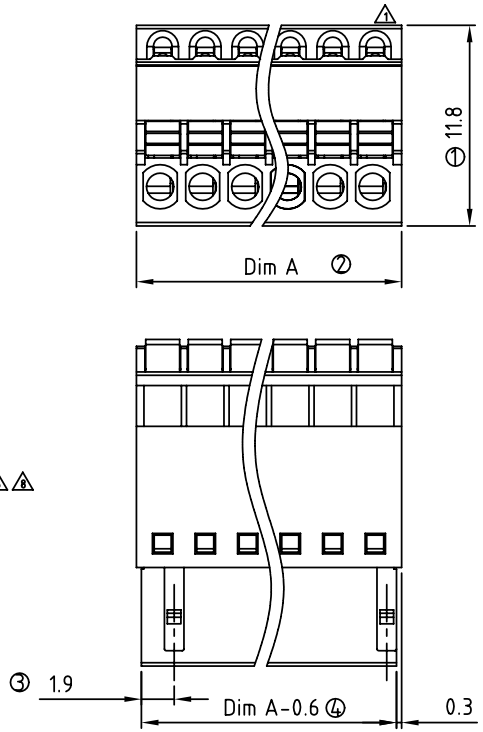

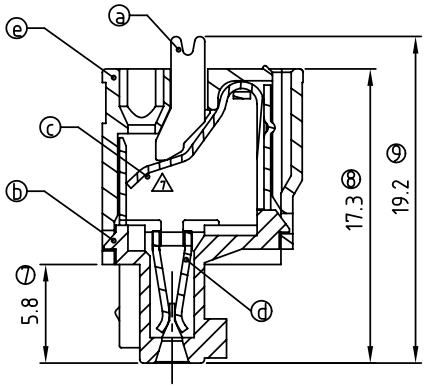

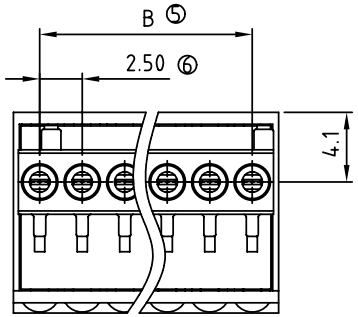

Material:

- Item ⓐ Insulator(lever): Thermoplastic (UL94V-0)
- Item ⓑ Down Insulator(housing): Thermoplastic (UL94V-0)
- Item ⓒ Wire guard: Stainless steel
- Item ⓓ Terminal Body(contact pin): PhBz.Tin plated
- Item ⓔ Up Insulator(housing): Thermoplastic (UL94V-0)

Electrical:	cULus
2 Voltage rating:	150V
Current rating:	4A
Wire range:	
Solid wire(AWG):	20-28
Stranded wire(AWG):	20-28
6 Wire strip length:	7-8mm
2 Withstanding Voltage:	1.3KV
3 Operating temperature:	-40°C to +115°C
4 Safety Approval:	c UL us

HW xx B 0 x 0 xxxx G

No. OF POLES
02: 2 POLES
:
:
24: 24 POLES

COLOR
0: BLACK
5: GREEN (RAL 6018/T)
6: BLUE
5 8: GREY (RAL 7035/D)

G: Pb<40000ppm

0000: "@" Logo (Standard)
000A: "ANYTEK" Mark
Any special item by customer requst. please contact sales department.

POLE		2	3	4	5	6	7	8	9	10	11	12
A		5.60	8.10	10.60	13.10	15.60	18.10	20.60	23.10	25.60	28.10	30.60
B		2.50	5.00	7.50	10.00	12.50	15.00	17.50	20.00	22.50	25.00	27.50
Tol.		±0.10					±0.15					
POLE	13	14	15	16	17	18	19	20	21	22	23	24
A	33.10	35.60	38.10	40.60	43.10	45.60	48.10	50.60	53.10	55.60	58.10	60.60
B	30.00	32.50	35.00	37.50	40.00	42.50	45.00	47.50	50.00	52.50	55.00	57.50
Tol.		±0.20					±0.30					

ANYTEK

CUSTOMER COPY

ALL RIGHTS RESERVED. REPRODUCTION OR ISSUE TO THIRD PARTIES IN ANY FORM WHATEVER IS NOT PERMITTED WITHOUT WRITTEN AUTHORITY FROM THE PROPRIETOR. PROPERTY OF ANYTEK TECHNOLOGY CO., LTD

TITLE	HW 2.5mm Series					
PART NO.	HWxxB0x0xxxxG			DWG NO.	8HW0301	
APPROVED	CHECKED	DESIGNED	DRAWN	CUST NO.		Tolerance
		Runner 2010.09.01	Jacke 2009.06.04		UNIT: mm	X. ±0.50
					SCALE: NONE	X.X ±0.30
				SHEET: 01/01	REV.: G	X.XX ±0.10
						X° ±1°