REV.	DESCRIPTION	ECN NO.	NAME	DATE

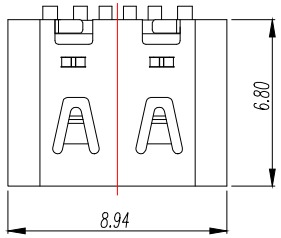

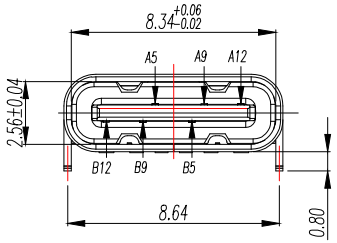

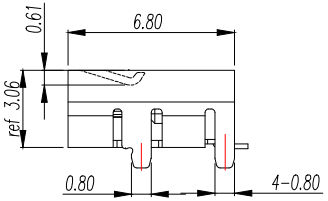

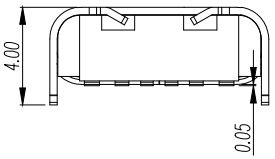

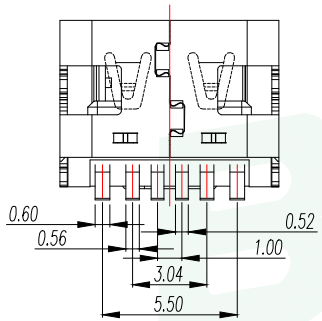

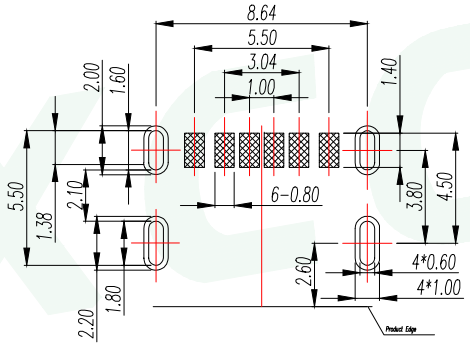

RECOMMENDED PCB LAYOUT

GENERAL TOLERANCE ±0.05

备注(NOTE): 1 材质:

1.1 胶芯: LCP UL94 V-0

1.2 端子: (C2680,; 镍底, 镀金0.5U

1.3 外壳: 不锈钢304- 表面镀镍50U

2. 电气特性:

2.1. 接触区: 接触电阻30mQMax,

允许10mΩ变化量,

测试条件: 20mv,100mA下测量,

2.2. 额定电流: 最大3A

2.3. 额定电压: 5V.

2.4. 耐电电压: 100VAC.

2.5. 绝缘电阻: 至少100兆欧

3. 机械性能:

3.1. 插入力: 0.5-2.0Kg

3.2. 拔出力: 0.8-2.0Kg

3.3. 插拔次数: 5000+.

4. 工作环境: -20℃to +85℃

4.1. 盐雾测试: 24H

PIN ASSIGNMENTS

A5	CC1	B12	GND
A9	VBUS	B9	VBUS
A12	GND	B5	CC2
PIN	SIGNAL NAME	PIN	SIGNAL NAME

GENERAL TOLERANCE	DONGGUAN BAOXUN PRECISION TECHNOLOGY CO., LTD				BXCONN®
DIM. TOL. X X.X ±0.30 X.XX ±0.25 X.XXX ±0.15 GENERAL ANGLE: ±3°	TITLE: TYPE-C 6P SMT四脚插板(带弹)				
	DWG. NO.: UC15-0B06F00P11			DRAWN: MAX	
	PART NO.: UC15-0B06F00P11			CHECKED: ELLA	
	UNIT: mm	SCALE: none	SHEET: 1of 1	DWG. SIZE: A4	LAYER: bxconn	APPROVED: WILL