REV.	DESCRIPTION	ECN NO.	NAME	DATE

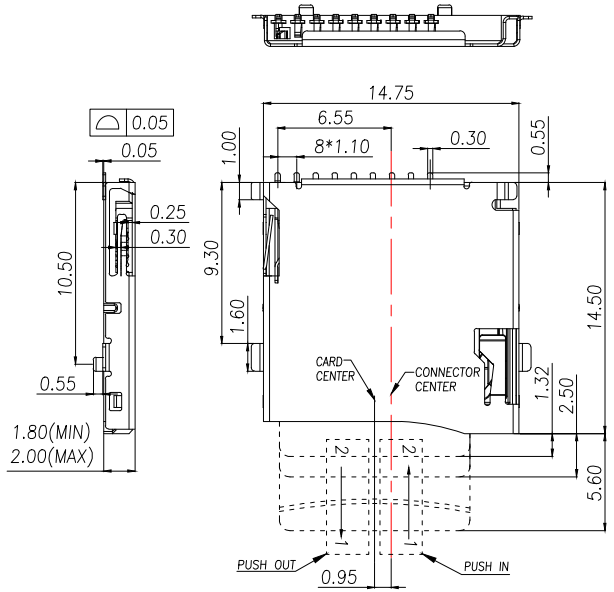

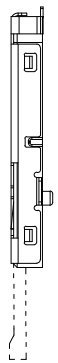

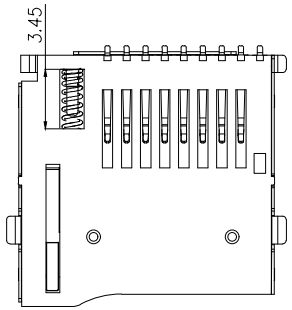

Specification:

1.Electrical Characteristics:
- Contact Current Rating:0.5 Amperes.
- Dielectric Withstanding Voltage:AC500V r.m.s.
- Insulation Resistance:1000 MΩ Minimum.
- Contact Resistance:40 mΩ Maximum.

2.Environmental:
- Operating Temperature:−25°C~+90°C.

3.Environmental:
- Mating Cyeles:5,000 Insertions.

4.Mechanical Characteristics:
- Card Push Insertion/Out Force:0.2~1.40kgf.
- Contact Separation Force:0.20kgf Minimum.

5.Material:
- Insulator:HI−Temp Plastic UL 94V−0 Rated.
- Cantact:Copper Alloy(t=0.15mm).
- Shell:Stainless Steel(t=0.15mm).
- Spring:SWP.

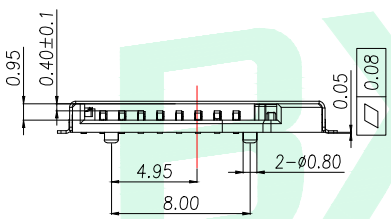

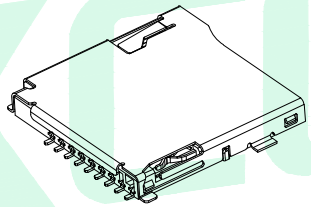

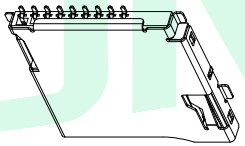

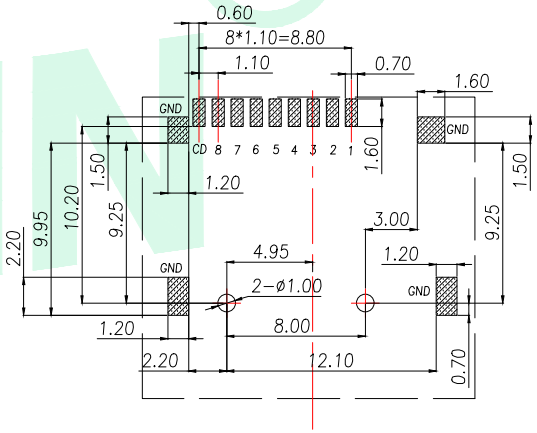

PAD AREA

KEEP OUT AREA

RECOMMENDED PCB LAYOUT

GENERAL TOLERANCE ±0.05

Circuit Diagram for Detect Switch

WITHOUT CARD	OPEN	OPEN CD GND(SHELL)
INSERTING CARD	CLOSE	CLOSE CD GND(SHELL)

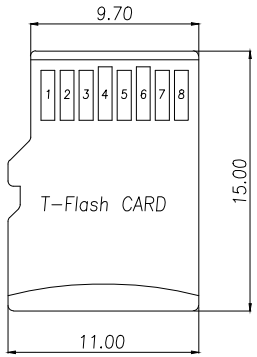

TF CARD PIN DEFINE

PIN NO.	NAME	YTPE	DESCRIPTION
1	DAT2	I/O/PP	DATE LINE(BIT2)
2	CD/DAT3	I/O/PP	CARD DETECT DATE LIN(BIT3)
3	CMD	PP	COMMAND RESPONSE
4	VDD	S	SUPPLY VOLTAGE
5	CLX	I	CLOCK
6	VSS	S	SUPPLY VOLTAGE GROUND
7	DAT0	I/O/PP	DATE LINE(BIT0)
8	DAT1	I/O/PP	DATE LINE(DIT1)

GENERAL TOLERANCE

DIM.	TOL.
x.	±0.35
x.x	±0.25
x.xx	±0.15
GENERAL ANGLE:	
x.x°	±3°
x.xx°	±2°

DONGGUAN BAOXUN PRECISION TECHNOLOGY CO., LTD

BXCONN®

TITLE: MICRO SD CARD PUSH PUSH SMT 镀金 外焊

DWG. NO.: TF04−TD9P

CHECKED: MAX

PART NO.: TF04−TD9P

DRAWN: ELLA

UNIT:	SCALE:	SHEET:	DWG. SIZE:	LAYER:
mm	none	1of 2	A4	bxconn

APPROVED: WILL

REV.	DESCRIPTION	ECN NO.	NAME	DATE

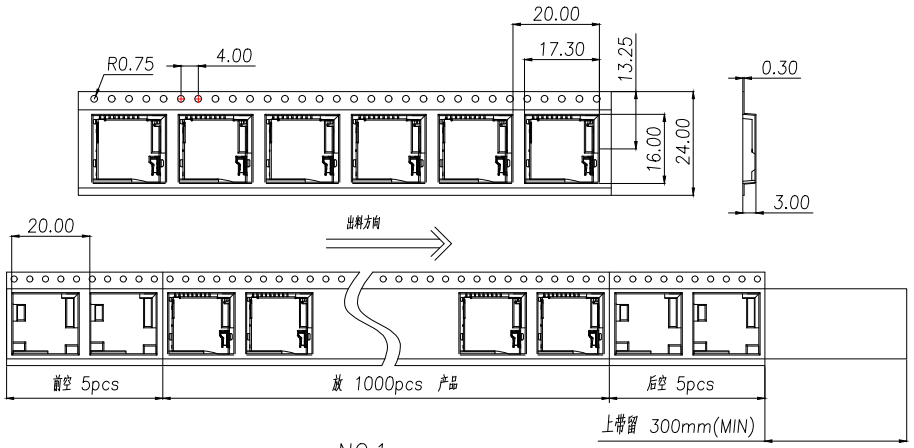

NO.1

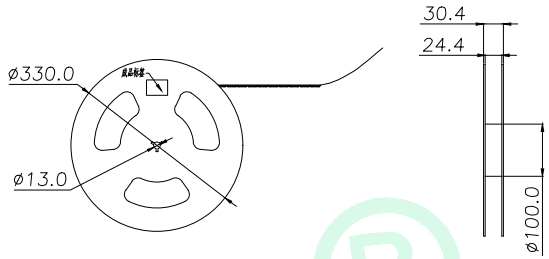

NO.2

1.材质要求:

1.1 纸箱的材质为K=K;外形尺寸为34*34*38.5;

1.2 卷盘的材质为PS,卷盘的外形尺寸为ø330*30.4;

1.3 卷带的材质为PS,卷带的外形尺寸为20200*24.00*3.0mm;

2.包装方式:

2.1 将卷带放入包装机后,前空5PCS,后放产品1000PCS,再后空5PCS;上带留300MM长度.

2.2 将包装好的产品从包装机上取下并包装好,贴上内盘标签;

2.3 把累叠好的12盘叠放入纸箱中共计12Kset,上下放纸板,纸箱四个角塞护角纸;

2.4 把包装好的成品打包封箱,并在纸箱外贴上标签

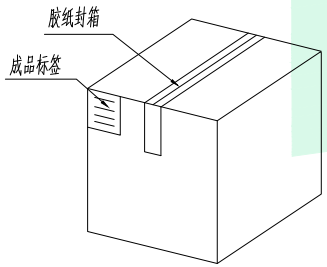

纸箱规格:340*340*385

NO.4

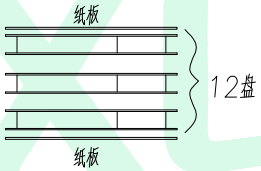

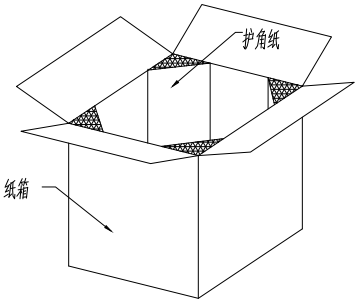

NO.3

GENERAL TOLERANCE	DONGGUAN BAOXUN PRECISION TECHNOLOGY CO., LTD				BXCONN®
DIM. TOL. x. ±0.35 x.x ±0.25 x.xx ±0.15 GENERAL ANGLE: x.x° ±3° x.xx° ±2°	TITLE: MICRO SD CARD PUSH PUSH SMT 镀金 外焊				
	DWG. NO.: TF04-TD9P			CHECKED: MAX	
	PART NO.: TF04-TD9P			DRAWN: ELLA	
	UNIT: mm	SCALE: none	SHEET: 2of 2	DWG. SIZE: A4	LAYER: bxconn	APPROVED: WILL