Qualcomm

RF360
Europe GmbH

Data sheet

SAW duplexer

Professional mobile radio
Small cell & femtocell
LTE band 14

Series/type:	B8039
Ordering code:	B39791B8039P810

Date:	July 17, 2019
Version:	2.3

RF360 products mentioned within this document are products of RF360 Europe GmbH and other subsidiaries of RF360 Holdings Singapore Pte. Ltd. (collectively, the “RF360 Subsidiaries”).

RF360 Europe GmbH, Anzinger Str. 13, München, Germany

© 2019 RF360 Europe GmbH and/or its affiliated companies. All rights reserved.

These materials, including the information contained herein, may be used only for informational purposes by the customer. The RF360 Subsidiaries assume no responsibility for errors or omissions in these materials or the information contained herein. The RF360 Subsidiaries reserve the right to make changes to the product(s) or information contained herein without notice. The materials and information are provided on an AS IS basis, and the RF360 Subsidiaries assume no liability and make no warranty or representation, either expressed or implied, with respect to the materials, or any output or results based on the use, application, or evaluation of such materials, including, without limitation, with respect to the non-infringement of trademarks, patents, copyrights or any other intellectual property rights or other rights of third parties.

No use of this documentation or any information contained herein grants any license, whether express, implied, by estoppel or otherwise, to any intellectual property rights, including, without limitation, to any patents owned by QUALCOMM Incorporated or any of its subsidiaries.

Not to be used, copied, reproduced, or modified in whole or in part, nor its contents revealed in any manner to others without the express written permission of RF360 Europe GmbH.

Qualcomm is a trademark of Qualcomm Incorporated, registered in the United States and other countries. Other product and brand names may be trademarks or registered trademarks of their respective owners.

This technical data may be subject to U.S. and international export, re-export, or transfer (“export”) laws. Diversion contrary to U.S. and international law is strictly prohibited.

RF360 Europe GmbH

A Qualcomm – TDK Joint Venture

Data sheet

SAW duplexer

Professional mobile radio
Small cell & femtocell
LTE band 14

Series/type:	B8039
Ordering code:	B39791B8039P810

Date:	July 17, 2019
Version:	2.3

RF360 products mentioned within this document are products of RF360 Europe GmbH and other subsidiaries of RF360 Holdings Singapore Pte. Ltd. (collectively, the “RF360 Subsidiaries”).

RF360 Holdings Singapore Pte. Ltd. is a joint venture of Qualcomm Global Trading Pte. Ltd. and EPCOS AG.

RF360 Europe GmbH, Anzinger Str. 13, München, Germany

© 2019 RF360 Europe GmbH and/or its affiliated companies. All rights reserved.

These materials, including the information contained herein, may be used only for informational purposes by the customer. The RF360 Subsidiaries assume no responsibility for errors or omissions in these materials or the information contained herein. The RF360 Subsidiaries reserve the right to make changes to the product(s) or information contained herein without notice. The materials and information are provided on an AS IS basis, and the RF360 Subsidiaries assume no liability and make no warranty or representation, either expressed or implied, with respect to the materials, or any output or results based on the use, application, or evaluation of such materials, including, without limitation, with respect to the non-infringement of trademarks, patents, copyrights or any other intellectual property rights or other rights of third parties.

No use of this documentation or any information contained herein grants any license, whether express, implied, by estoppel or otherwise, to any intellectual property rights, including, without limitation, to any patents owned by QUALCOMM Incorporated or any of its subsidiaries.

Not to be used, copied, reproduced, or modified in whole or in part, nor its contents revealed in any manner to others without the express written permission of RF360 Europe GmbH.

Qualcomm is a trademark of Qualcomm Incorporated, registered in the United States and other countries. Other product and brand names may be trademarks or registered trademarks of their respective owners.

This technical data may be subject to U.S. and international export, re-export, or transfer (“export”) laws. Diversion contrary to U.S. and international law is strictly prohibited.

Table of contents

1 Application....4
2 Features....4
3 Package....5
4 Pin configuration....5
5 Matching circuit....6
6 Characteristics....7
7 Maximum ratings....13
8 Transmission coefficients....14
9 Reflection coefficients....17
10 EVMs....18
11 Packing material....19
12 Marking....22
13 Soldering profile....23
14 Annotations....24
15 Cautions and warnings....25
16 Important notes....26

1 Application

- Low-loss SAW duplexer for LTE Band 14 systems
- Product designed for usage in User Equipment (UE) and Smallcells (SC)
- High out-of-band rejection
- Usable pass band: 10 MHz
- High power durability in both bands
- Uplink=788-798 Mhz=Tx UE=Rx SC
- Downlink=758-768 Mhz=Rx UE=Tx SC

2 Features

- Package size $2.5_{\pm 0.1}$ mm × $2.0_{\pm 0.1}$ mm
- Package height 0.5 mm (max.)
- Approximate weight 0.01 g
- RoHS compatible
- Package for Surface Mount Technology (SMT)
- Ni/Au-plated terminals
- Electrostatic Sensitive Device (ESD)
- Moisture Sensitivity Level 2a (MSL2a)

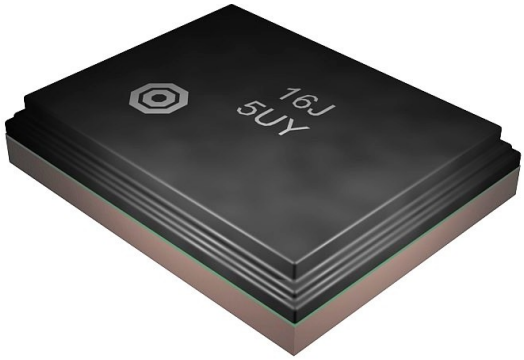

Figure 1: Picture of component with example of product marking.

3 Package

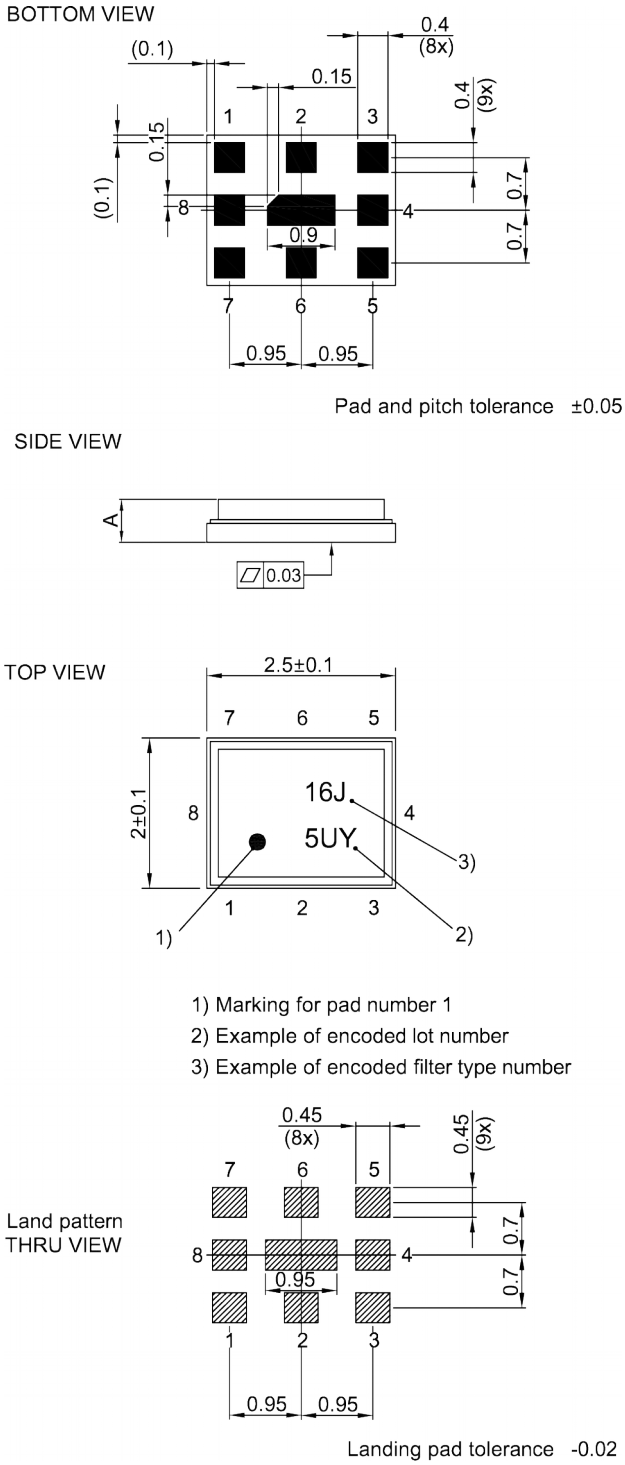

Figure 2: Drawing of package with package height A = 0.5 mm (max.). See Sec. Package information (p. 25).

4 Pin configuration

- 1 RX
- 3 TX
- 6 ANT
- 2, 4, 5, 7, 8, 9 Ground

5 Matching circuit

- L_{p6} = 18 nH

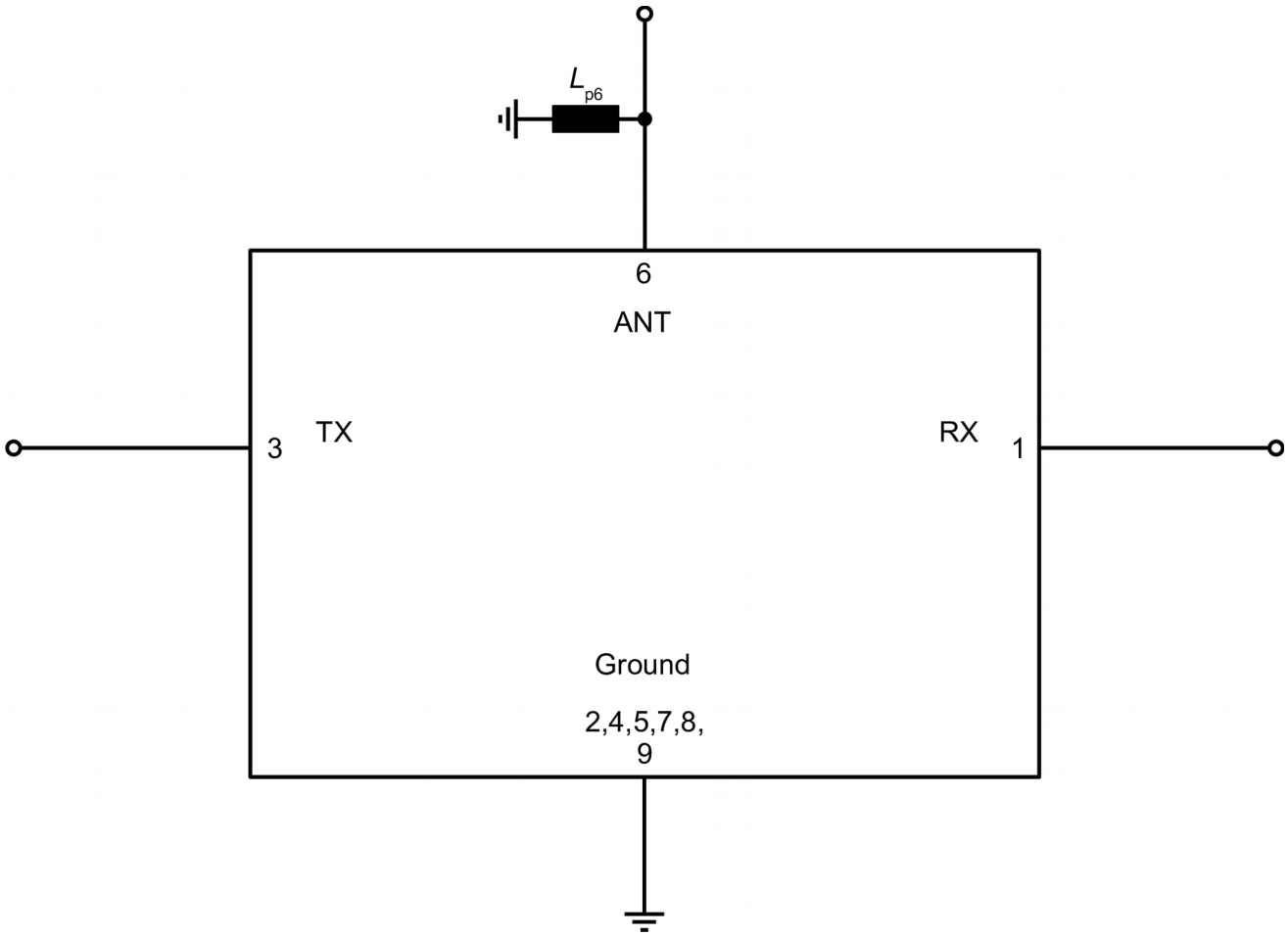

Figure 3: Schematic of matching circuit.

6 Characteristics

6.1 TX – ANT

Temperature range for specification	T_{SPEC}	= −30 °C ... +85 °C
TX terminating impedance	Z_{TX}	= 50 Ω
ANT terminating impedance	Z_{ANT}	= 50 Ω // 18 nH[1]
RX terminating impedance	Z_{RX}	= 50 Ω

Characteristics TX – ANT[2]				min. for T_{SPEC}	typ. @ +25 °C	max. for T_{SPEC}	
Center frequency			f_C	—	793	—	MHz
Insertion attenuation			α				
	788... 798	MHz		—	1.5	2.4	dB
Amplitude ripple (p-p)			Δα				
	788... 798	MHz		—	0.4	1.5	dB
VSWR							
@ TX port	788... 798	MHz		—	1.6	2.0	
@ ANT port	788... 798	MHz		—	1.6	2.0	
Error vector magnitude			EVM[3]				
	790.4... 795.6	MHz		—	1.0	3.0	%
Attenuation			α				
	40... 698	MHz		38	42	—	dB
	716... 728	MHz		39	45	—	dB
	728... 746	MHz		41	46	—	dB
	746... 768	MHz		45	55	—	dB
	769... 775	MHz		43	53	—	dB
	869... 894	MHz		42	45	—	dB
	1575... 1596	MHz		45	52	—	dB
	1930... 1990	MHz		42	53	—	dB
	2110... 2170	MHz		40	50	—	dB
	2364... 2394	MHz		35	46	—	dB
	2400... 2500	MHz		35	43	—	dB
	3152... 3192	MHz		28	42	—	dB

1) See Sec. Matching circuit (p. 6).
2) Specifications are based on UE as reference point but is also valid for smallcell in reverse mode i.e. ANT – RX SC.
3) Error Vector Magnitude (EVM) based on definition in 3GPP TS 25.141.

Temperature range for specification	T_{SPEC}	= −40 °C ... +95 °C
TX terminating impedance	Z_{TX}	= 50 Ω
ANT terminating impedance	Z_{ANT}	= 50 Ω // 18 nH[1]
RX terminating impedance	Z_{RX}	= 50 Ω

Characteristics TX – ANT[2]				**min.** for T_{SPEC}	**typ.** @ +25 °C	**max.** for T_{SPEC}	
Center frequency			f_C	—	793	—	MHz
Insertion attenuation			α				
	788... 798	MHz		—	1.5	2.4	dB
Amplitude ripple (p-p)			Δα				
	788... 798	MHz		—	0.4	1.5	dB
VSWR							
@ TX port	788... 798	MHz		—	1.6	2.0	
@ ANT port	788... 798	MHz		—	1.6	2.0	
Error vector magnitude			EVM[3]				
	790.4... 795.6	MHz		—	1.0	4.0	%
Attenuation			α				
	40... 698	MHz		38	42	—	dB
	716... 728	MHz		39	45	—	dB
	728... 746	MHz		41	46	—	dB
	746... 768	MHz		45	55	—	dB
	769... 775	MHz		37	53	—	dB
	869... 894	MHz		42	45	—	dB
	1575... 1596	MHz		45	52	—	dB
	1930... 1990	MHz		42	53	—	dB
	2110... 2170	MHz		40	50	—	dB
	2364... 2394	MHz		35	46	—	dB
	2400... 2500	MHz		35	43	—	dB
	3152... 3192	MHz		28	42	—	dB

1) See Sec. Matching circuit (p. 6).
2) Specifications are based on UE as reference point but is also valid for smallcell in reverse mode i.e. ANT – RX SC.
3) Error Vector Magnitude (EVM) based on definition in 3GPP TS 25.141.

6.2 ANT – RX

Temperature range for specification	T_{SPEC}	= −30 °C ... +85 °C
TX terminating impedance	Z_{TX}	= 50 Ω
ANT terminating impedance	Z_{ANT}	= 50 Ω // 18 nH[1]
RX terminating impedance	Z_{RX}	= 50 Ω

Characteristics ANT – RX[2]				min. for T_{SPEC}	typ. @ +25 °C	max. for T_{SPEC}	
Center frequency			f_C	—	763	—	MHz
Insertion attenuation			α				
	758... 768	MHz		—	1.4	2.5	dB
Amplitude ripple (p-p)			Δα				
	758... 768	MHz		—	0.3	1.5	dB
VSWR							
@ ANT port	758... 768	MHz		—	1.4	2.0	
@ RX port	758... 768	MHz		—	1.4	2.0	
Error vector magnitude			EVM[3]				
	760.4... 765.6	MHz		—	1.0	3.0	%
Attenuation			α				
	40... 698	MHz		37	40	—	dB
	698... 716	MHz		37	40	—	dB
	716... 728	MHz		37	43	—	dB
	746... 756	MHz		0.5	1.7	—	dB
	773... 777	MHz		1	2.6	—	dB
	777... 787	MHz		3	12	—	dB
	788... 798	MHz		50	56	—	dB
	798... 805	MHz		45	61	—	dB
	818... 824	MHz		38	47	—	dB
	824... 849	MHz		38	43	—	dB
	1516... 1566	MHz		35	42	—	dB
	1710... 1755	MHz		35	43	—	dB
	1850... 1920	MHz		35	44	—	dB
	2274... 2304	MHz		35	44	—	dB
	2334... 2364	MHz		35	46	—	dB
	3032... 3072	MHz		32	55	—	dB

1) See Sec. Matching circuit (p. 6).
2) Specifications are based on UE as reference point but is also valid for smallcell in reverse mode i.e. TX – ANT SC.
3) Error Vector Magnitude (EVM) based on definition in 3GPP TS 25.141.

Temperature range for specification	T_{SPEC}	= −40 °C ... +95 °C
TX terminating impedance	Z_{TX}	= 50 Ω
ANT terminating impedance	Z_{ANT}	= 50 Ω // 18 nH[1]
RX terminating impedance	Z_{RX}	= 50 Ω

Characteristics ANT – RX[2]				**min.** for T_{SPEC}	**typ.** @ +25 °C	**max.** for T_{SPEC}	
Center frequency			f_C	—	763	—	MHz
Insertion attenuation			α				
	758... 768	MHz		—	1.4	2.5	dB
Amplitude ripple (p-p)			Δα				
	758... 768	MHz		—	0.3	1.5	dB
VSWR							
@ ANT port	758... 768	MHz		—	1.4	2.1	
@ RX port	758... 768	MHz		—	1.4	2.1	
Error vector magnitude			EVM[3]				
	760.4... 765.6	MHz		—	1.0	4.0	%
Attenuation			α				
	40... 698	MHz		37	40	—	dB
	698... 716	MHz		37	40	—	dB
	716... 728	MHz		37	43	—	dB
	746... 756	MHz		0.5	1.7	—	dB
	773... 777	MHz		1	2.6	—	dB
	777... 787	MHz		2.5	12	—	dB
	788... 798	MHz		50	56	—	dB
	798... 805	MHz		45	61	—	dB
	818... 824	MHz		38	47	—	dB
	824... 849	MHz		38	43	—	dB
	1516... 1566	MHz		35	42	—	dB
	1710... 1755	MHz		35	43	—	dB
	1850... 1920	MHz		35	44	—	dB
	2274... 2304	MHz		35	44	—	dB
	2334... 2364	MHz		35	46	—	dB
	3032... 3072	MHz		32	55	—	dB

1) See Sec. Matching circuit (p. 6).
2) Specifications are based on UE as reference point but is also valid for smallcell in reverse mode i.e. TX – ANT SC.
3) Error Vector Magnitude (EVM) based on definition in 3GPP TS 25.141.

6.3 TX – RX

Temperature range for specification	T_{SPEC}	= −30 °C ... +85 °C
TX terminating impedance	Z_{TX}	= 50 Ω
ANT terminating impedance	Z_{ANT}	= 50 Ω // 18 nH[1)]
RX terminating impedance	Z_{RX}	= 50 Ω

Characteristics TX – RX[2)]			**min.** for T_{SPEC}	**typ.** @ +25 °C	**max.** for T_{SPEC}	
Isolation		α				
	758... 768	MHz	55	63	—	dB
	788... 798	MHz	50	58	—	dB

1) See Sec. Matching circuit (p. 6).
2) Specifications are based on UE as reference point but is also valid for smallcell in reverse mode.

Temperature range for specification	T_{SPEC}	= −40 °C ... +95 °C
TX terminating impedance	Z_{TX}	= 50 Ω
ANT terminating impedance	Z_{ANT}	= 50 Ω // 18 nH[1]
RX terminating impedance	Z_{RX}	= 50 Ω

Characteristics TX – RX[2]				**min.** for T_{SPEC}	**typ.** @ +25 °C	**max.** for T_{SPEC}	
Isolation			α				
	758... 768	MHz		55	63	—	dB
	788... 798	MHz		50	58	—	dB

[1] See Sec. Matching circuit (p. 6).
[2] Specifications are based on UE as reference point but is also valid for smallcell in reverse mode.

7 Maximum ratings

Operable temperature	T_{OP} = −40 °C ... +95 °C	
Storage temperature	T_{STG} [1] = −40 °C ... +95 °C	
DC voltage	$\|V_{DC}\|$ [2] = 0 V	
ESD voltage		
	V_{ESD} [3] = 100 V	Machine model.
	V_{ESD} [4] = 275 V	Human body model.
Input power	P_{IN}	
@ TX port: 788 ... 798 MHz	30 dBm [5), 6)]	5 MHz LTE uplink signal (25 RB) for 100000 h @ 55 °C. P_{IN} average – 41 dBm peak. Source and load impedance 50Ω.
Elsewhere	10 dBm	
@ TX port: 799 ... 805 MHz	30 dBm [7)]	Continuous wave for 50000 h @ 55 °C.
@ ANT port: 136 ... 174 MHz	30 dBm [7)]	Continuous wave for 10000 h @ 55 °C.
@ ANT port: 380 ... 520 MHz	30 dBm [7)]	Continuous wave for 10000 h @ 55 °C.
@ ANT port: 764 ... 870 MHz	26 dBm [7)]	Continuous wave for 10000 h @ 55 °C.
@ RX port: 758 ... 768 MHz	30 dBm [5), 6)]	5 MHz LTE downlink signal (25 RB) for 100000 h @ 55 °C. P_{IN} average – 41 dBm peak. Source and load impedance 50Ω.

1) Not valid for packaging material. Storage temperature for packaging material is −25 °C to +40 °C.
2) In case of applied DC voltage blocking capacitors are mandatory.
3) According to JESD22-A115B (MM – Machine Model), 10 negative & 10 positive pulses.
4) According to JESD22-A114F (HBM – Human Body Model), 1 negative & 1 positive pulse.
5) Expected lifetime according to accelerated power durability test and wear out models.
6) T is the ambient temperature of the PCB at component position. Specified min/max values from section 6 "characteristics" for maximum input power 27dBm are valid for temperature up to 85°C.
7) Expected lifetime according to accelerated power durability simulations and wear out models.

8 Transmission coefficients

8.1 TX – ANT

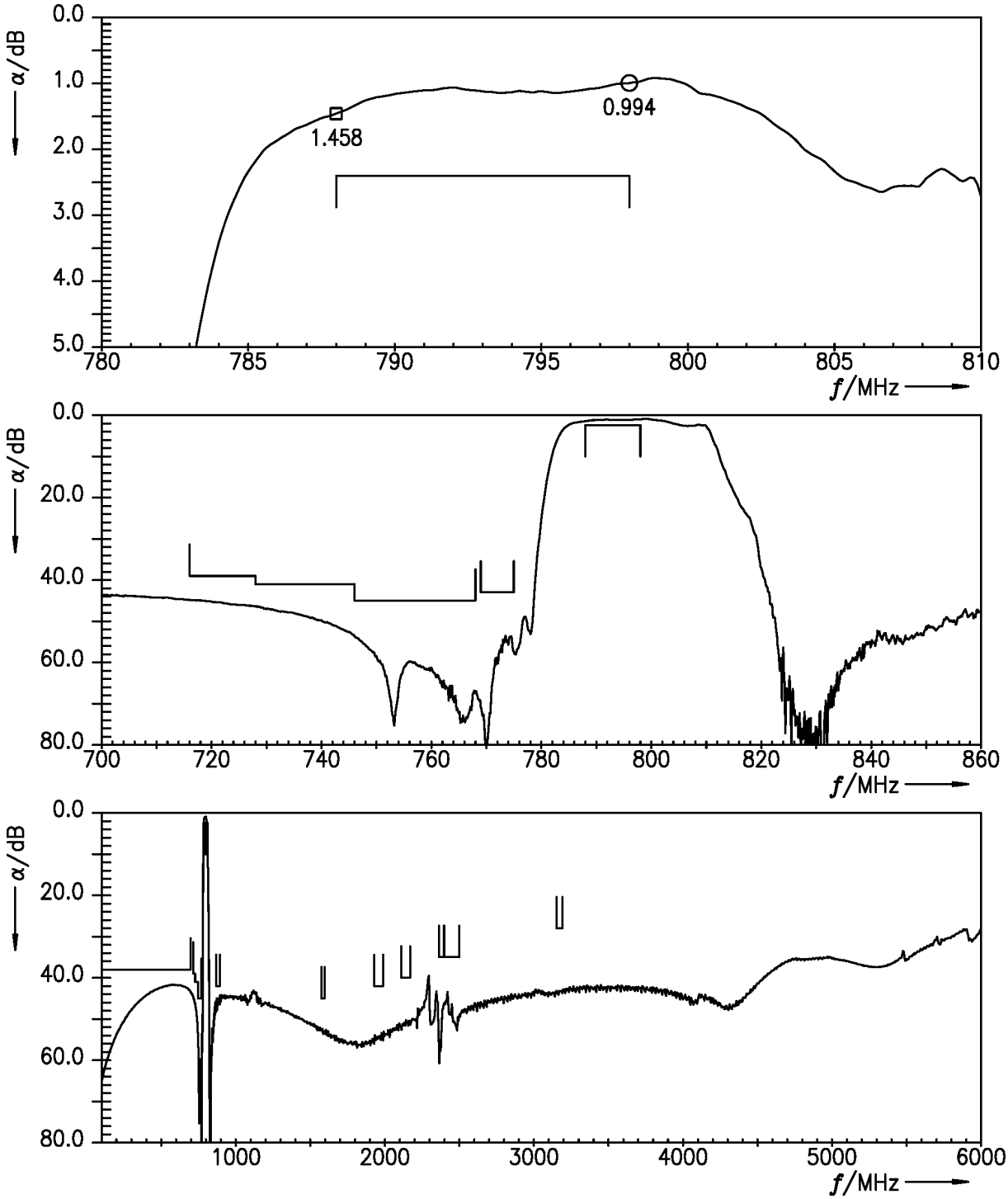

Figure 4: Attenuation TX – ANT.

8.2 ANT – RX

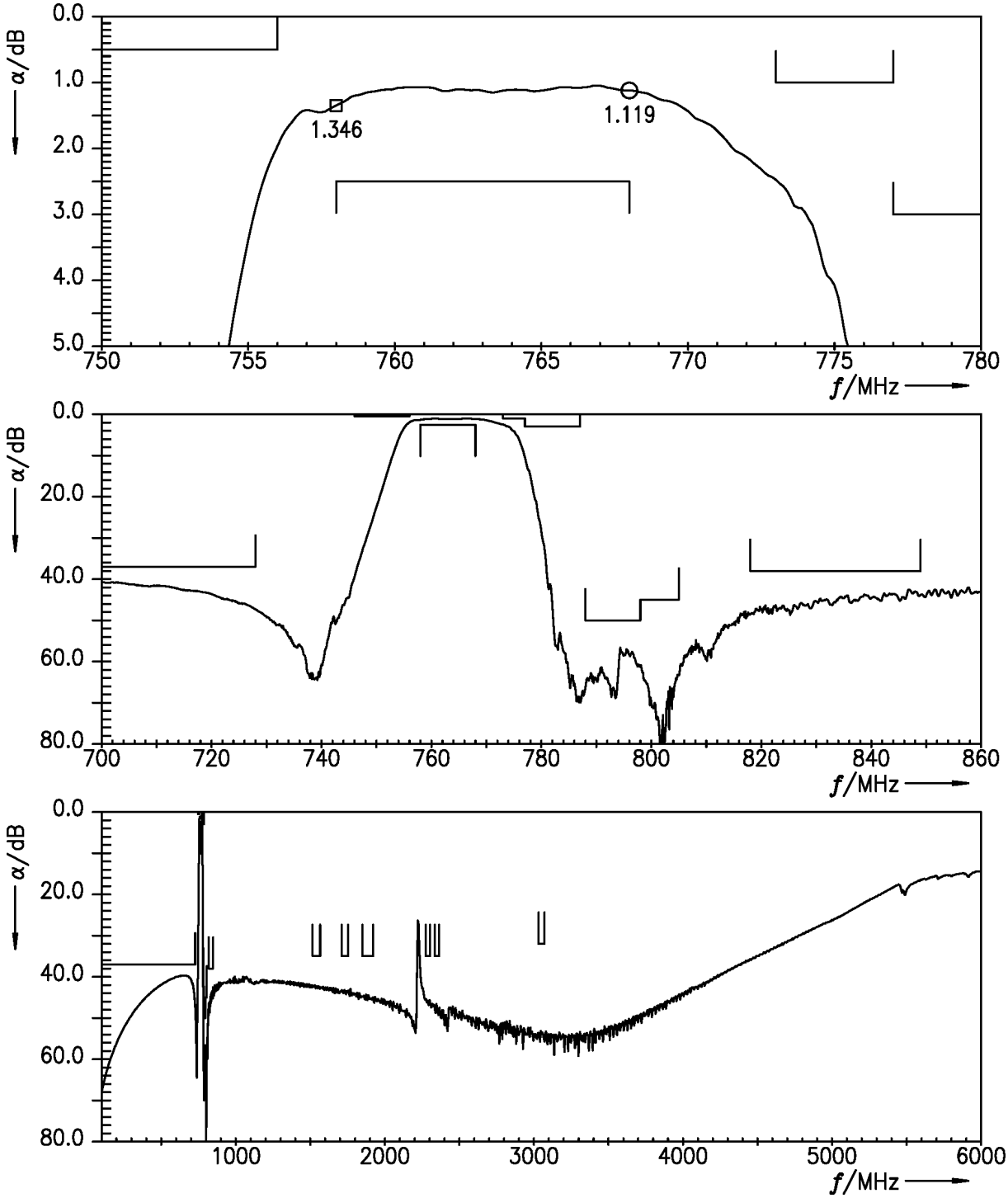

Figure 5: Attenuation ANT – RX.

8.3 TX – RX

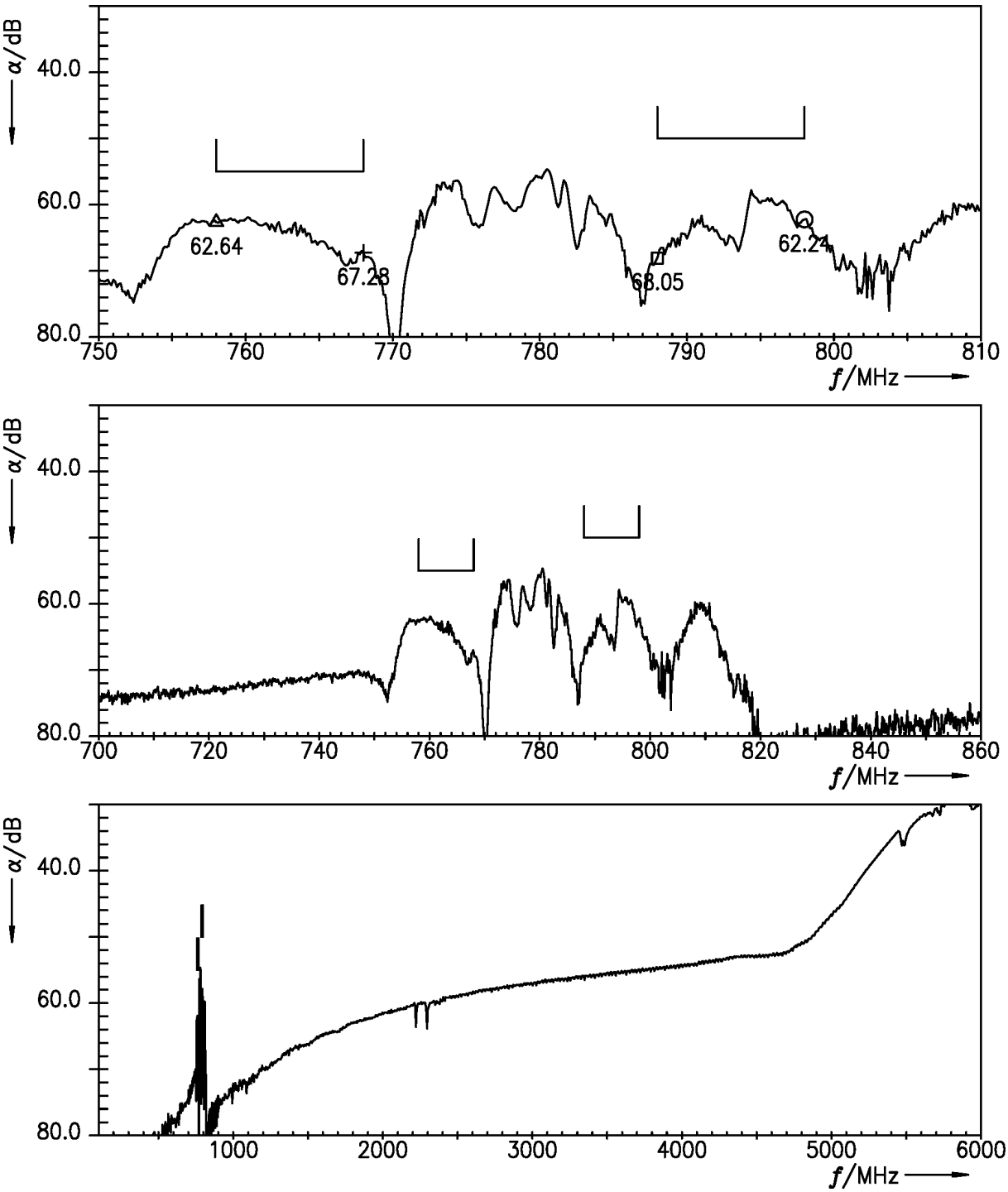

Figure 6: Isolation TX – RX.

9 Reflection coefficients

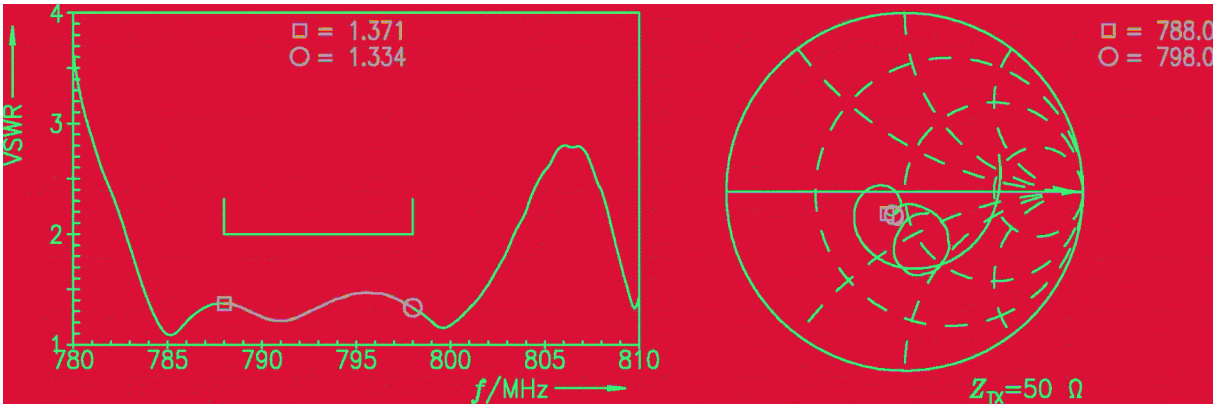

Figure 7: Reflection coefficient at TX port.

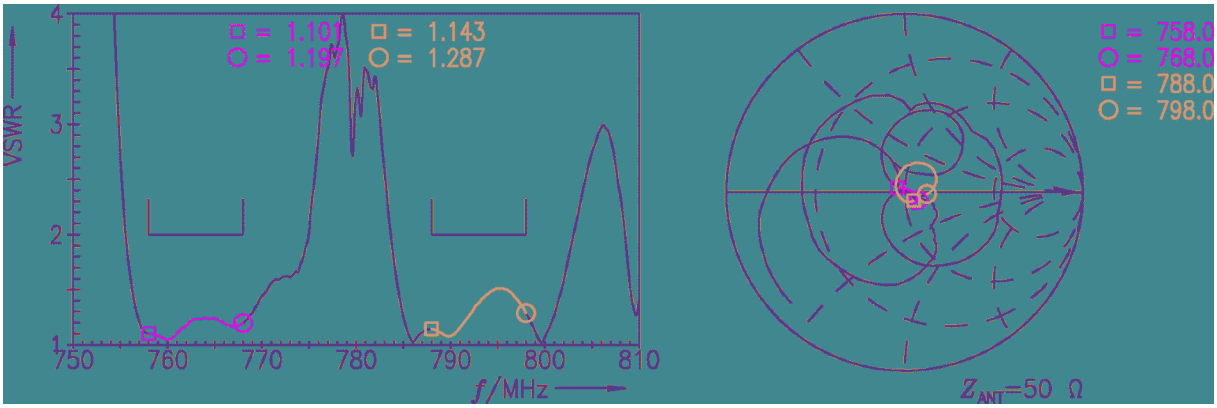

Figure 8: Reflection coefficient at ANT port.

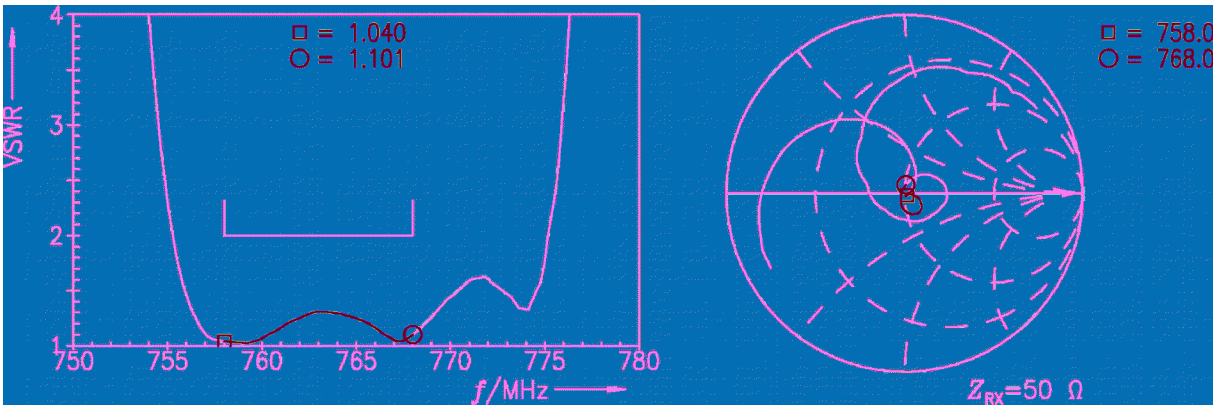

Figure 9: Reflection coefficient at RX port.

10 EVMs

10.1 TX – ANT

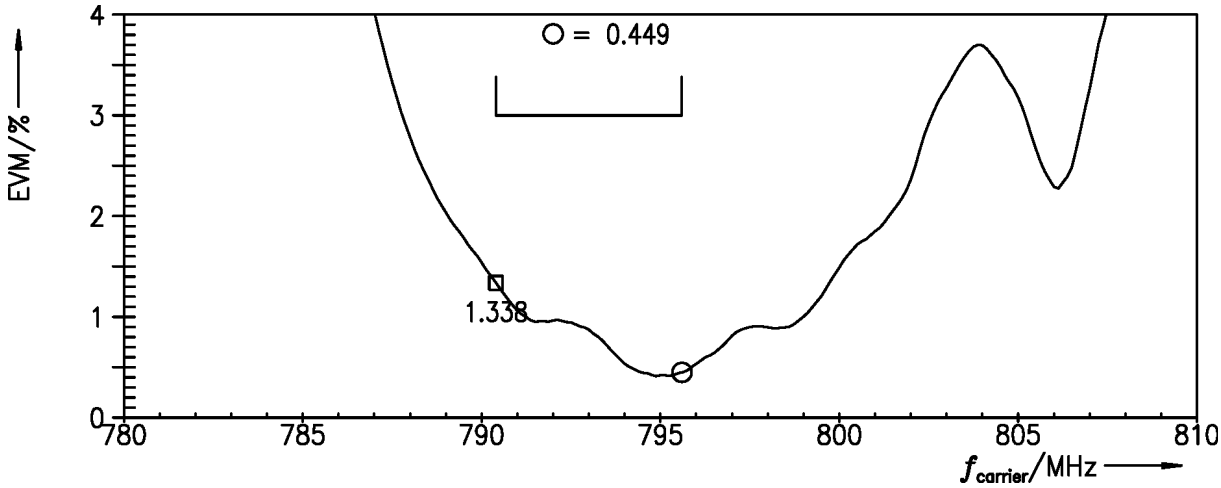

Figure 10: Error vector magnitude TX – ANT.

10.2 ANT – RX

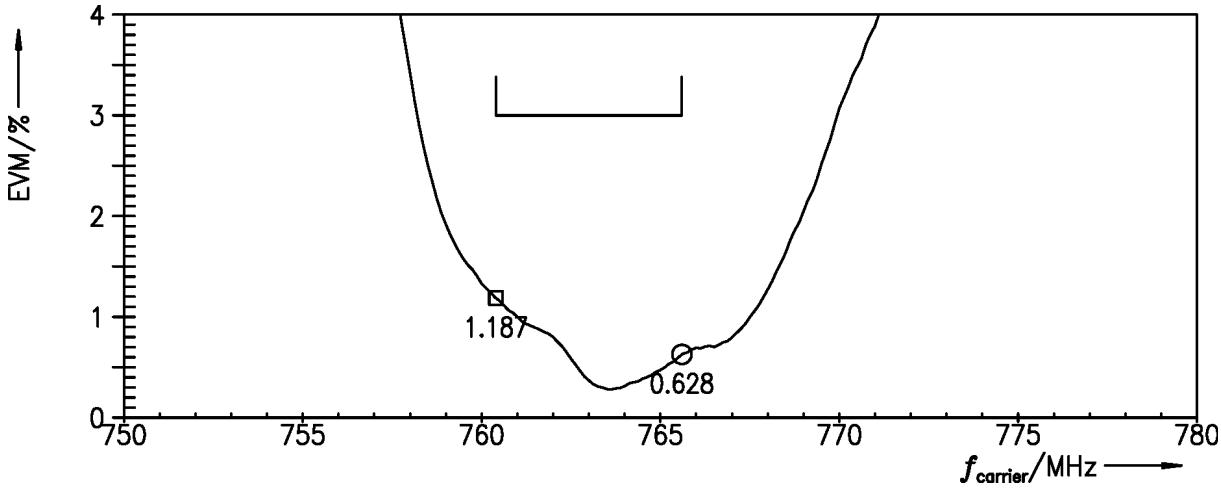

Figure 11: Error vector magnitude ANT – RX.

11 Packing material

11.1 Tape

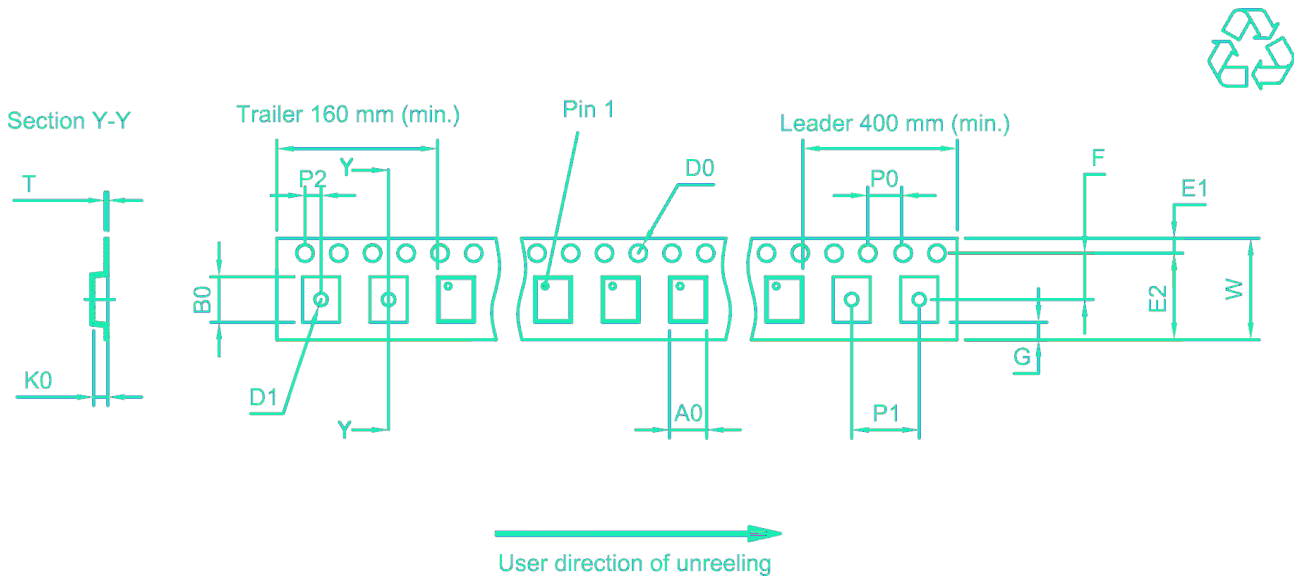

Figure 12: Drawing of tape (first-angle projection) for illustration only and not to scale. The valid tape dimensions are listed in Table 1.

A_0	$2.25_{\pm 0.05}$ mm
B_0	$2.75_{\pm 0.05}$ mm
D_0	$1.5_{+0.1/-0}$ mm
D_1	1.0 mm (min.)
E_1	$1.75_{\pm 0.1}$ mm

E_2	6.25 mm (min.)
F	$3.5_{\pm 0.05}$ mm
G	0.75 mm (min.)
K_0	$0.6_{\pm 0.05}$ mm
P_0	$4.0_{\pm 0.1}$ mm

P_1	$4.0_{\pm 0.1}$ mm
P_2	$2.0_{\pm 0.05}$ mm
T	$0.25_{\pm 0.03}$ mm
W	$8.0_{+0.3/-0.1}$ mm

Table 1: Tape dimensions.

11.2 Reel with diameter of 180 mm

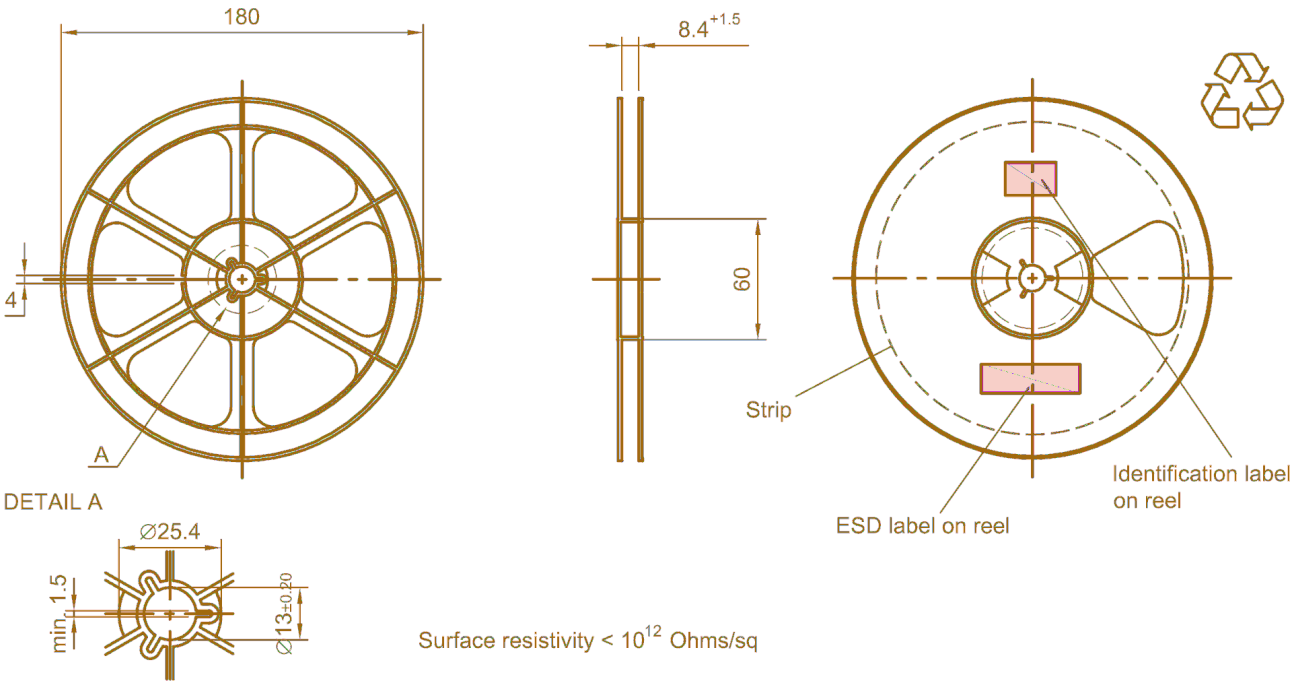

Figure 13: Drawing of reel (first-angle projection) with diameter of 180 mm.

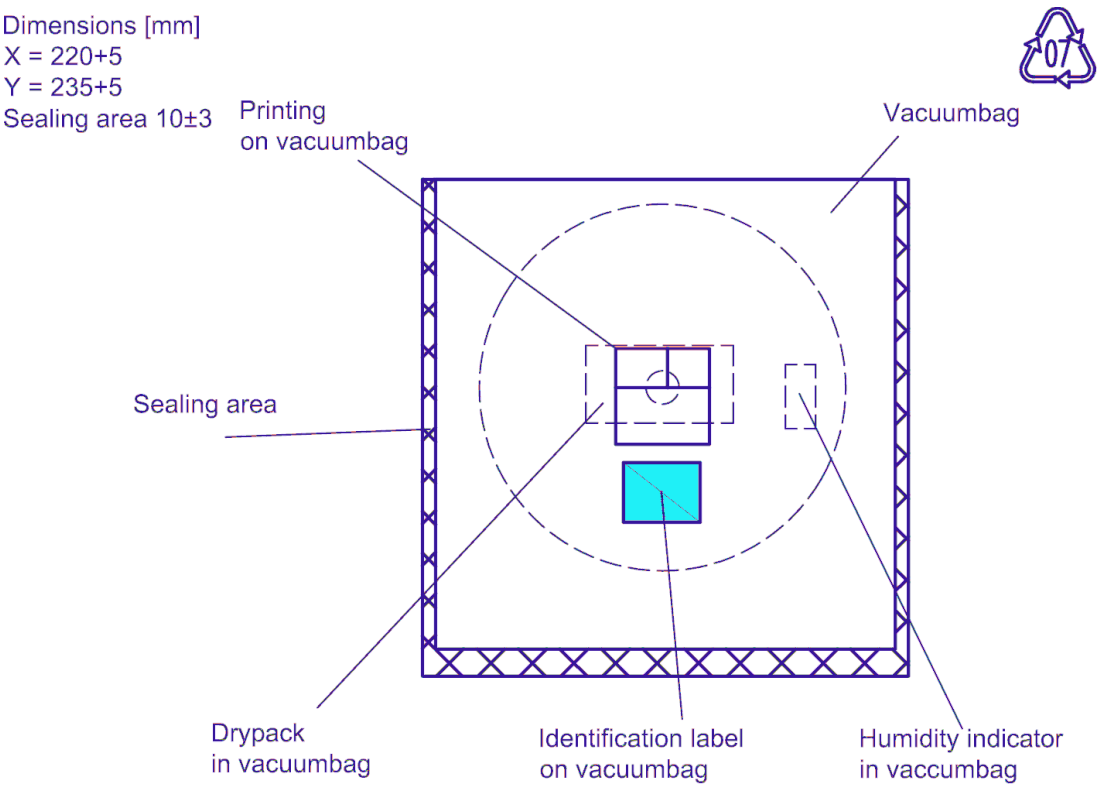

Figure 14: Drawing of moisture barrier bag (MBB) for reel with diameter of 180 mm.

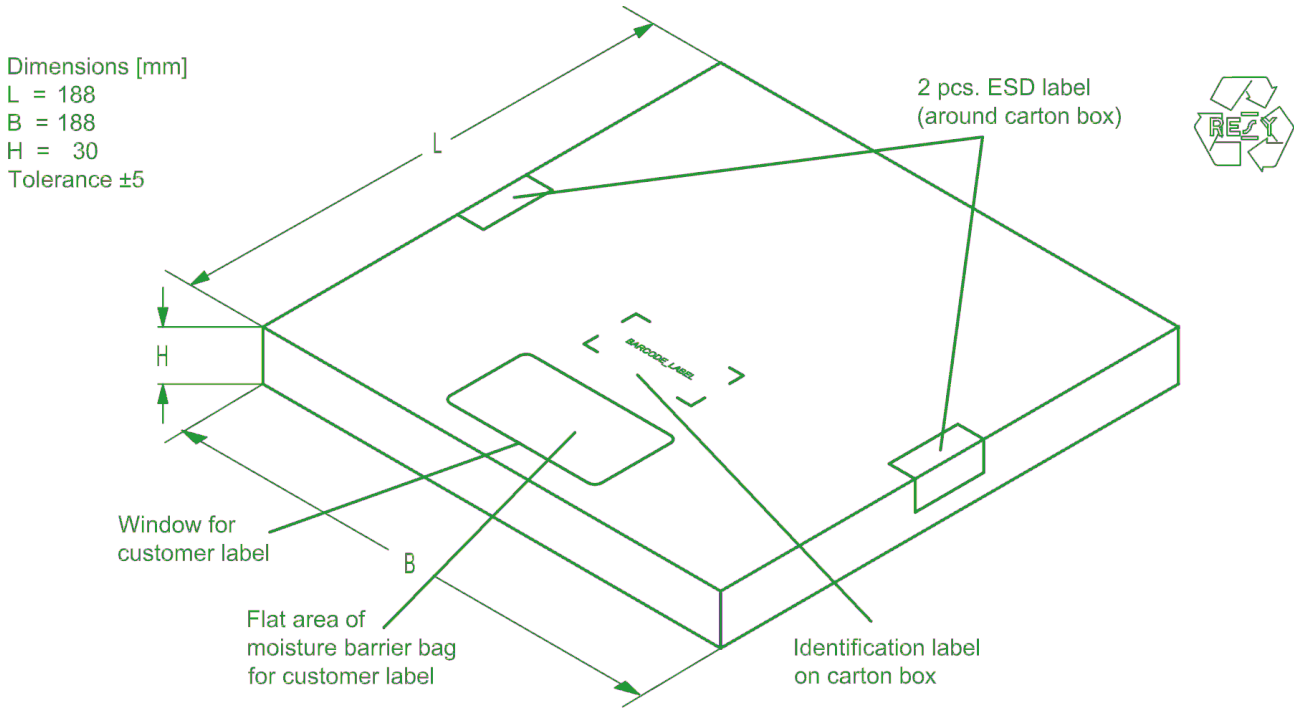

Figure 15: Drawing of folding box for reel with diameter of 180 mm.

12 Marking

Products are marked with product type number and lot number encoded according to Table 2:

- Type number:

  The 4 digit type number of the ordering code, e.g., B3xxxxB**1234**xxxx,
  is encoded by a special BASE32 code into a 3 digit marking.

  Example of decoding type number marking on device in decimal code.
  16J => **1234**
  1 x 32^2 + **6** x 32^1 + **18 (=J)** x 32^0 = **1234**
  The BASE32 code for product type B8039 is 7V7.

- Lot number:

  The last 5 digits of the lot number, e.g., **12345**,
  are encoded based on a special BASE47 code into a 3 digit marking.

  Example of decoding lot number marking on device in decimal code.
  5UY => **12345**
  5 x 47^2 + **27 (=U)** x 47^1 + **31 (=Y)** x 47^0 = **12345**

Adopted BASE32 code for type number			
Decimal value	Base32 code	Decimal value	Base32 code
0	0	16	G
1	1	17	H
2	2	18	J
3	3	19	K
4	4	20	M
5	5	21	N
6	6	22	P
7	7	23	Q
8	8	24	R
9	9	25	S
10	A	26	T
11	B	27	V
12	C	28	W
13	D	29	X
14	E	30	Y
15	F	31	Z

Adopted BASE47 code for lot number			
Decimal value	Base47 code	Decimal value	Base47 code
0	0	24	R
1	1	25	S
2	2	26	T
3	3	27	U
4	4	28	V
5	5	29	W
6	6	30	X
7	7	31	Y
8	8	32	Z
9	9	33	b
10	A	34	d
11	B	35	f
12	C	36	h
13	D	37	n
14	E	38	r
15	F	39	t
16	G	40	v
17	H	41	\
18	J	42	?
19	K	43	{
20	L	44	}
21	M	45	<
22	N	46	>
23	P		

Table 2: Lists for encoding and decoding of marking.

13 Soldering profile

The recommended soldering process is in accordance with IEC 60068-2-58 – 3rd edit and IPC/JEDEC J-STD-020B.

ramp rate	≤ 3 K/s
preheat	125 °C to 220 °C, 150 s to 210 s, 0.4 K/s to 1.0 K/s
T > 220 °C	30 s to 70 s
T > 230 °C	min. 10 s
T > 245 °C	max. 20 s
T ≥ 255 °C	–
peak temperature T_{peak}	250 °C +0/-5 °C
wetting temperature T_{min}	230 °C +5/-0 °C for 10 s ± 1 s
cooling rate	≤ 3 K/s
soldering temperature T	measured at solder pads

Table 3: Characteristics of recommended soldering profile for lead-free solder (Sn95.5Ag3.8Cu0.7).

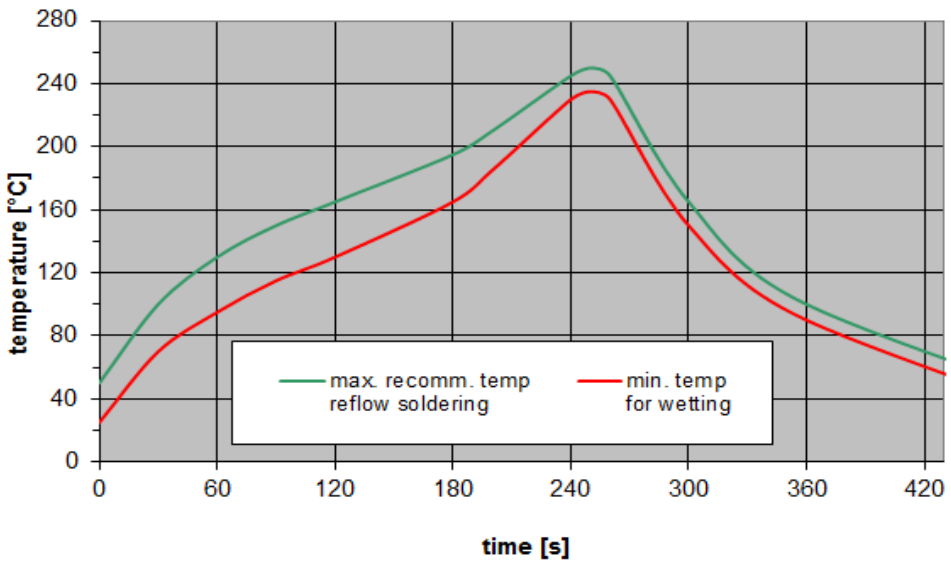

Figure 16: Recommended reflow profile for convection and infrared soldering – lead-free solder.

14 Annotations

14.1 RoHS compatibility

ROHS-compatible means that products are compatible with the requirements according to Art. 4 (substance restrictions) of Directive 2011/65/EU of the European Parliament and of the Council of June 8th, 2011, on the restriction of the use of certain hazardous substances in electrical and electronic equipment ("Directive") with due regard to the application of exemptions as per Annex III of the Directive in certain cases.

14.2 Scattering parameters (S-parameters)

The pin/port assignment is available in the headers of the S-parameter files. Please contact your local RF360 sales office.

14.3 Ordering codes and packing units

Ordering code	Packing unit
B39791B8039P810	5000 pcs

Table 4: Ordering codes and packing units.

15 Cautions and warnings

15.1 Display of ordering codes for RF360 products

The ordering code for one and the same product can be represented differently in data sheets, data books, other publications and the website of RF360, or in order-related documents such as shipping notes, order confirmations and product labels. The varying representations of the ordering codes are due to different processes employed and do not affect the specifications of the respective products. Detailed information can be found on the Internet under www.rf360jv.com/orderingcodes.

15.2 Material information

Due to technical requirements components may contain dangerous substances. For information on the type in question please also contact one of our sales offices.

For information on recycling of tapes and reels please contact one of our sales offices.

15.3 Moldability

Before using in overmolding environment, please contact your local RF360 sales office.

15.4 Package information

Landing area

The printed circuit board (PCB) land pattern (landing area) shown is based on RF360 internal development and empirical data and illustrated for example purposes, only. As customers' SMD assembly processes may have a plenty of variants and influence factors which are not under control or knowledge of RF360, additional careful process development on customer side is necessary and strongly recommended in order to achieve best soldering results tailored to the particular customer needs.

Dimensions

Unless otherwise specified all dimensions are understood using unit millimeter (mm).

Dimensions do not include burrs.

Projection method

Unless otherwise specified first-angle projection is applied.

16 Important notes

The following applies to all products named in this publication:

1. Some parts of this publication contain **statements about the suitability of our products for certain areas of application**. These statements are based on our knowledge of typical requirements that are often placed on our products in the areas of application concerned. We nevertheless expressly point out **that such statements cannot be regarded as binding statements about the suitability of our products for a particular customer application.** As a rule, RF360 Europe GmbH and its affiliates are either unfamiliar with individual customer applications or less familiar with them than the customers themselves. For these reasons, it is always ultimately incumbent on the customer to check and decide whether an RF360 product with the properties described in the product specification is suitable for use in a particular customer application.
2. We also point out that **in individual cases, a malfunction of electronic components or failure before the end of their usual service life cannot be completely ruled out in the current state of the art, even if they are operated as specified.** In customer applications requiring a very high level of operational safety and especially in customer applications in which the malfunction or failure of an electronic component could endanger human life or health (e.g. in accident prevention or life-saving systems), it must therefore be ensured by means of suitable design of the customer application or other action taken by the customer (e.g. installation of protective circuitry or redundancy) that no injury or damage is sustained by third parties in the event of malfunction or failure of an electronic component.
3. **The warnings, cautions and product-specific notes must be observed.**
4. In order to satisfy certain technical requirements, **some of the products described in this publication may contain substances subject to restrictions in certain jurisdictions (e.g. because they are classed as hazardous)**. Useful information on this will be found in our Material Data Sheets on the Internet (www.rf360jv.com/material). Should you have any more detailed questions, please contact our sales offices.
5. We constantly strive to improve our products. Consequently, **the products described in this publication may change from time to time**. The same is true of the corresponding product specifications. Please check therefore to what extent product descriptions and specifications contained in this publication are still applicable before or when you place an order. We also **reserve the right to discontinue production and delivery of products**. Consequently, we cannot guarantee that all products named in this publication will always be available.
   The aforementioned does not apply in the case of individual agreements deviating from the foregoing for customer-specific products.