PRODUCT CATALOG

HIROSE ELECTRIC CO., LTD.

DF51K Series

2mm Pitch, Center Lock, Wire-to-Board Connector (UL/C-UL Listed)

SignalBee™

Positive-Lock

P=2.0mm

Wide Variation

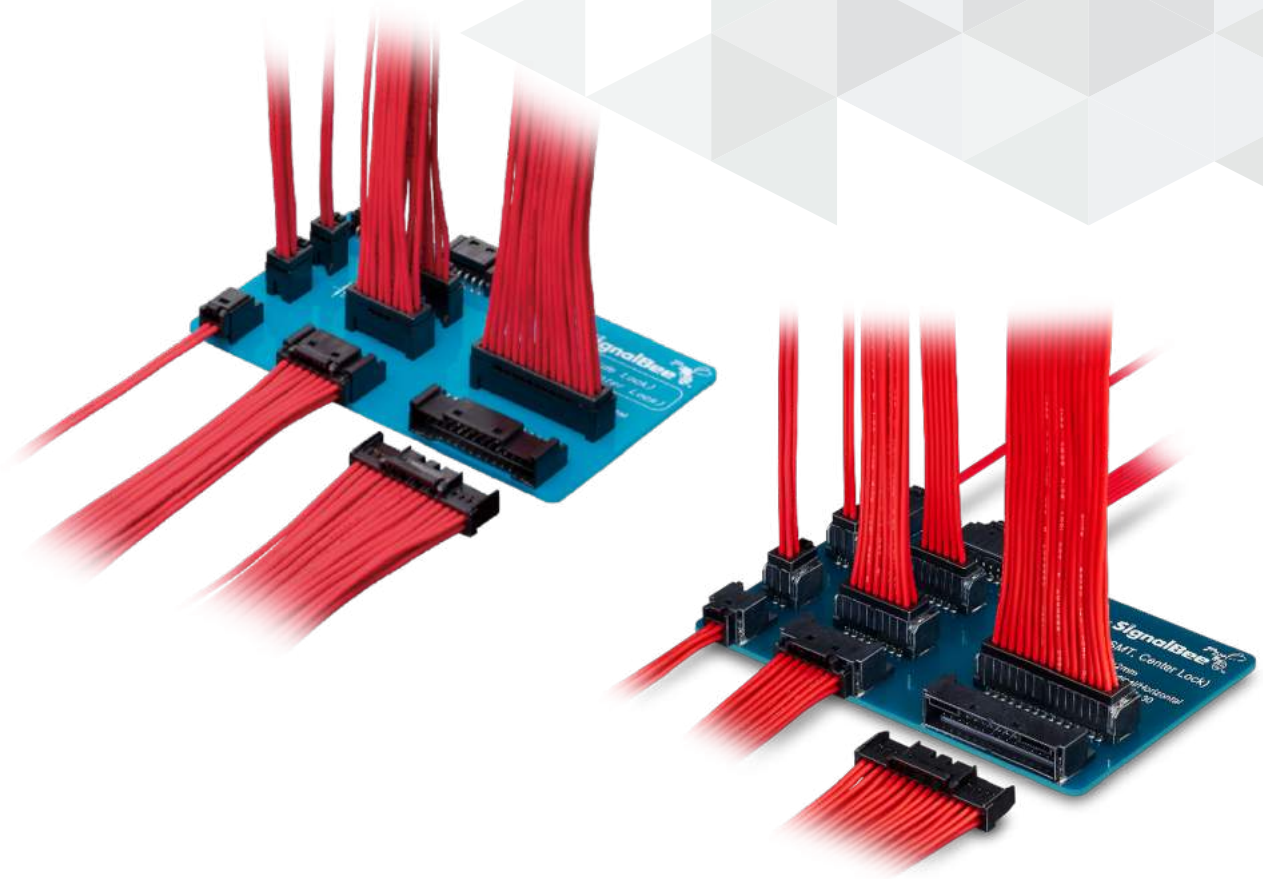

Product Page
https://www.hirose.com/en/product/series/DF51K

Mar.2024

Oct.1.2025 Copyright 2025 HIROSE ELECTRIC CO., LTD. All Rights Reserved.

Features

1. Wide-Ranging Options to Meet Diverse Customer Needs

- THT/SMT, Straight/Right Angle, Single/Double row, Gold/Tin Plating, etc.

2. Center Lock Design for High-Density Mounting and Easy Operation

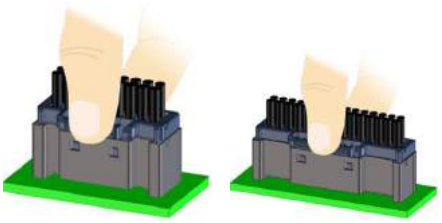

Center lock lever with various widths enables user-friendly operation.

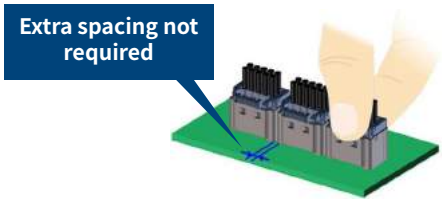

High density mounting contributes to space saving.

3. Secure Mating with Clear Tactile Click

Prevents incomplete insertion, featuring a design where the lock and contact insertion force peaks align to produce a noticeable click.

4. High contact reliability with long effective mating length and 2-point contact design

A clear tactile click prevents incomplete insertion

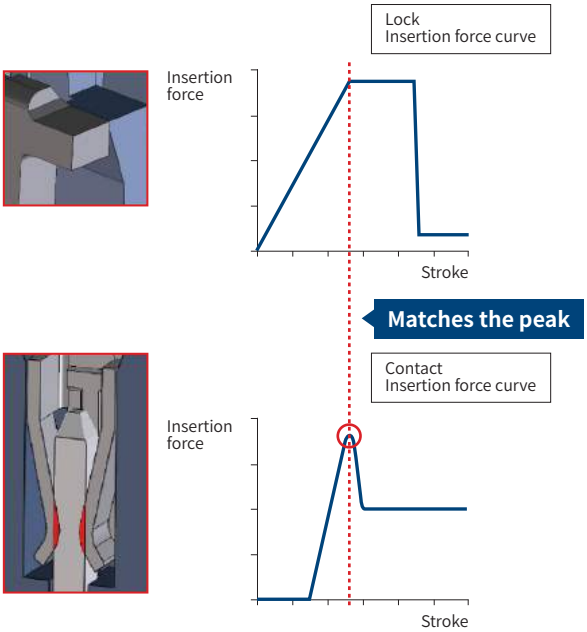

Oct.1.2025 Copyright 2025 HIROSE ELECTRIC CO., LTD. All Rights Reserved.

5. Prevents Incorrect Mating

Visual and mechanical polarized design prevents reverse and incorrect mating between different numbers of positions.

6. Suitable for Potting

Designed to support potting up to 3mm (applicable only to the straight THT header).

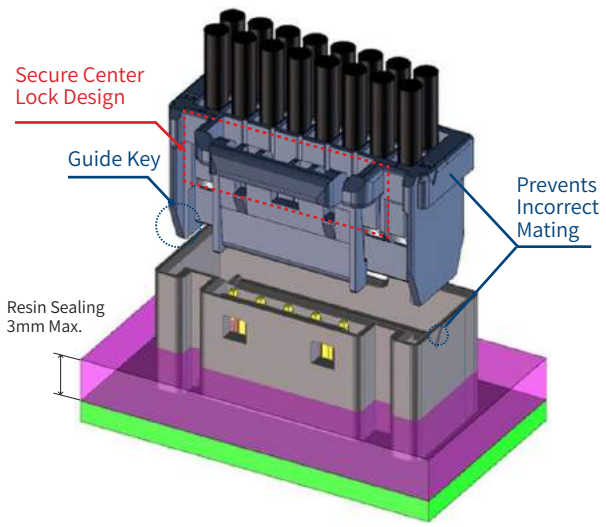

Guide key enables user to recognize incorrect mating.

7. Compatible Crimping Tools

Utilizes the same crimp tools as the DF11 Series, accommodating a wide cable range of 22 to 30 AWG.
(Note : The crimp contacts of DF51K and DF11 are not interchangeable.)

8. UL, C-UL certified

- THT & SMT Type

Applications

Office equipment, Industrial machinery, Industrial robots, Amusement equipment, Medical equipment, etc.

Oct.1.2025 Copyright 2025 HIROSE ELECTRIC CO., LTD. All Rights Reserved.

Product Specifications

			No. of Pos.	22 AWG	24 AWG	26 AWG	28 AWG	30 AWG
Rated Current (Note 1)	THT & SMT Type	Single-row	2	3A	2.5A	2A	1A	0.5A
			3-6	2A	2A			
		Double-row	4	3A	2.5A			
			6-30	2A	2A	1.5A		

Rated Voltage	THT Type		Straight	Right Angle
		Single-row	250V AC/DC	
		Double-row		
	SMT Type		Straight	Right Angle
		Single-row	250V AC/DC	250V AC/DC
		Double-row		100V AC/DC

Operating Temperature	-55 to +105° C (Note 2)
Operating Humidity Range	20 to 80% (Note 3)
Storage Temperature	-10 to +60° C (Note 4)
Storage Humidity Range	40 to 70% (Note 4)

UL/C-UL Safety Standard Approved Specification (THT & SMT Type)	Rated Current (Note 1)	22 AWG	24 to 28 AWG	30 AWG
		2A	1A	0.5A
	Rated Voltage	30V AC/DC		

UL/C-UL File No. and Recognition No. E132750

Items	Specifications	Conditions
Insulation Resistance	No less than 1,000MΩ	Measured at 500V DC
Withstanding Voltage	No insulation breakdown	650V AC is applied for 1 minute (*Double-row Right Angle SMT Header : 500V AC for 1min.)
Contact Resistance	No more than 30mΩ	Measured at 1mA and no higher than 20mV
Mating Durability	Contact resistance : no more than 30mΩ	Tin plated : 30 mating cycles, Gold plated : 50 mating cycles
Vibration Resistance	No electrical discontinuity of 1μs or greater	Frequency : 10 to 55Hz, half amplitude 0.75mm, 10 times in each of the 3 directions
Shock Resistance	No electrical discontinuity of 1μs or greater	Acceleration velocity : 490m/s^2 for 11ms, half-sine wave in 3 directions, 3 times for each directions
Moisture Resistance (Steady State)	Contact resistance : no more than 30mΩ Insulation resistance : no less than 500MΩ	Temperature : 40±2°C, humidity : 90 to 95%, left as it is for 96 hours
Temperature Cycle	Contact resistance : no more than 30mΩ Insulation resistance : no less than 1,000MΩ	-55°C : 30 minutes → +105°C : 30 minutes, 5 cycles

Note 1 : The rated current varies based on the cable size used.
Note 2 : Includes temperature rise caused by current flow.
Note 3 : Use without condensation on parts.
Note 4 : The storage condition refers to long-term storage of the product on the shelf before assembly.
Please use the operating temperature for temporary storage such as pre-assembly and during shipping.

Oct.1.2025 Copyright 2025 HIROSE ELECTRIC CO., LTD. All Rights Reserved.

Materials / Finish

Product	Component	Material	Color / Finish	UL Regulation
THT Header	Insulator	Straight : PA66 Right Angle : PBT (Glass-reinforced)	Black	UL94V-0
	Contact	Brass	Tin Plated or Gold Plated	-
SMT Header	Insulator	LCP	Black	UL94V-0
	Contact	Brass	Tin Plated or Gold Plated	-
	Retention Tab	Brass	Tin Plated	-
Crimp Socket	Insulator	PBT (Glass-reinforced)	Black	UL94V-0
Socket Contact	Contact	Phosphor Bronze	Tin Plated or Gold Plated	-

Product Number Structure

Refer to the chart below when determining the product specifications from the product number.
Please select from the product numbers listed in this catalog when placing orders.

Connector

DF51K B - # P - 2 DSA

❶ ❷ ❸ ❹ ❺ ❻

Crimp Contact

DF51K - 2428 SCF A

❶ ❼ ❽ ❾

❶ Series Name	DF51K	❻ Type of Housing	DSA : Straight THT DS : Right Angle THT V : Straight SMT H : Right Angle SMT C : Crimp Socket
❷ Form Type	Blank : Without Guide-boss B : With Guide-boss		
❸ No. of Pos.	Single-row : 2 to 6 Double-row : 4 to 30	❼ Applicable Wire	22 : 22 AWG 2428 : 24 to 28 AWG 30 : 30 AWG
❹ Connector Type	P : Single-row Pin Header S : Single-row Crimp Socket DP : Double-row Pin Header DS : Double-row Crimp Socket	❽ Packaging	SC : Socket Contacts, Bag SCF : Socket Contacts, Reel
		❾ Plating Specifications	Blank : Tin plated A : Gold plated
❺ Contact Pitch	2mm		

Oct.1.2025 Copyright 2025 HIROSE ELECTRIC CO., LTD. All Rights Reserved.

Diagram of Connector Mating Combinations

Single-row

Crimp Socket	Socket Contact
DF51K-#S-2C	DF51K-22SC(F)(A)
	DF51K-2428SC(F)(A)
	DF51K-30SC(F)(A)

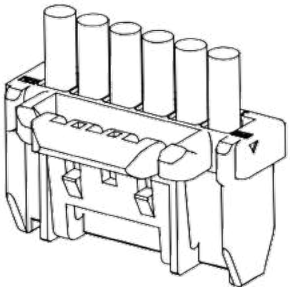

Straight THT Header
DF51K-#P-2DSA

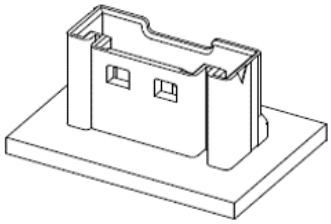

Right Angle THT Header
DF51K(B)-#P-2DS

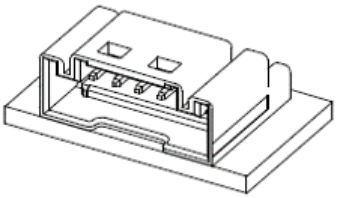

Straight SMT Header
DF51K-#P-2V

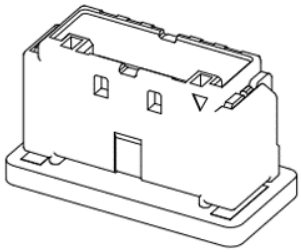

Right Angle SMT Header
DF51K-#P-2H

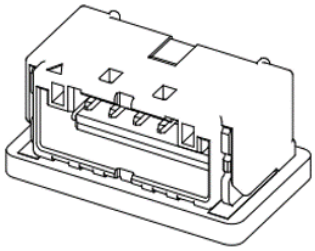

Oct.1.2025 Copyright 2025 HIROSE ELECTRIC CO., LTD. All Rights Reserved.

Double-row

Crimp Socket	Socket Contact
DF51K-#DS-2C	DF51K-22SC(F)(A)
	DF51K-2428SC(F)(A)
	DF51K-30SC(F)(A)

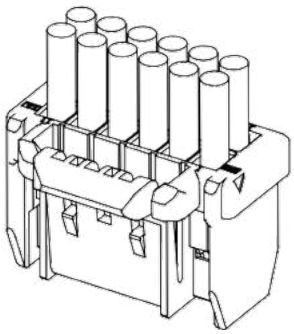

Straight THT Header
DF51K-#DP-2DSA

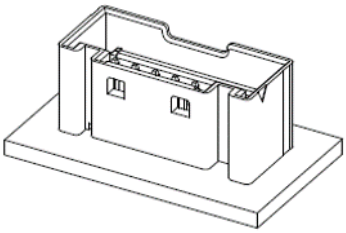

Right Angle THT Header
DF51K(B)-#DP-2DS

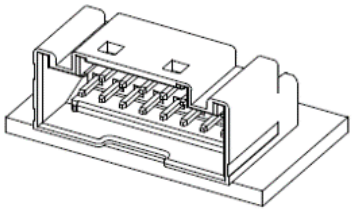

Straight SMT Header
DF51K-#DP-2V

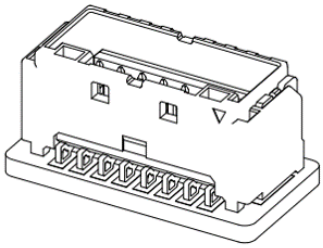

Right Angle SMT Header
DF51K-#DP-2H

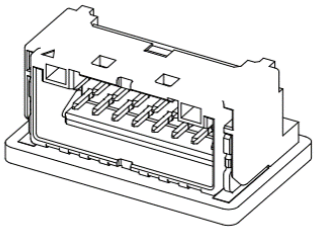

Oct.1.2025 Copyright 2025 HIROSE ELECTRIC CO., LTD. All Rights Reserved.

Single-row THT Header

Straight

[Specification number] - ##, (8##)
00 : Tin plated
05 : Gold plated

Recommended PCB Layout (t=1.6mm)

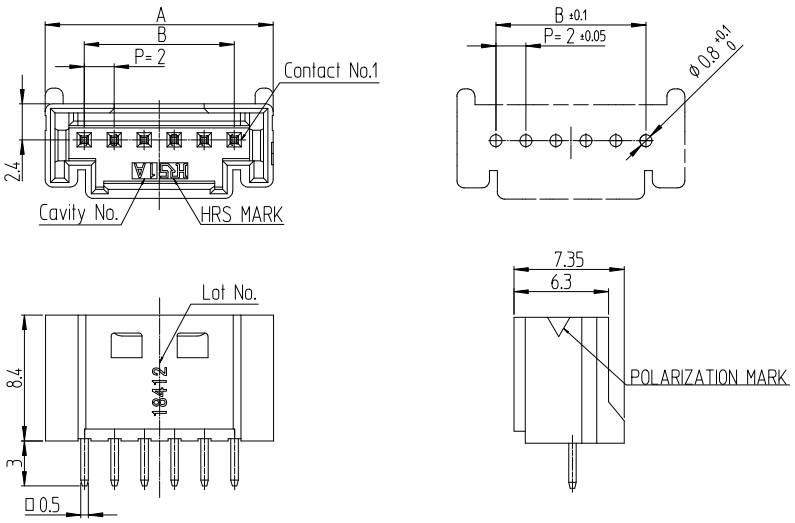

Unit : mm

Part No.	HRS No.	No. of Pos.	A	B	Purchase Unit
DF51K-2P-2DSA(8##)	CL0480-0542-0-##	2	7.2	2.0	100pcs per bag
DF51K-3P-2DSA(8##)	CL0480-0543-0-##	3	9.2	4.0	
DF51K-4P-2DSA(8##)	CL0480-0544-0-##	4	11.2	6.0	
DF51K-5P-2DSA(8##)	CL0480-0545-0-##	5	13.2	8.0	
DF51K-6P-2DSA(8##)	CL0480-0546-0-##	6	15.2	10.0	

Right Angle

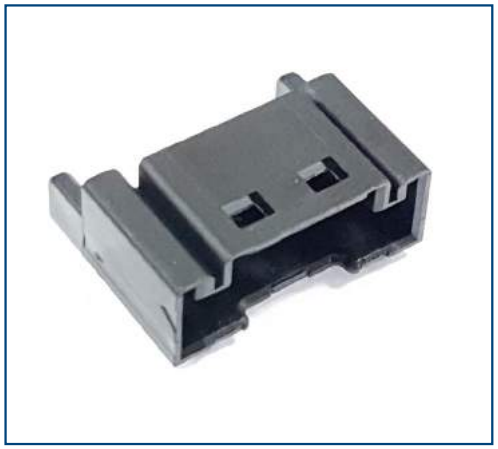

[Specification number] - ##, (8##)
00 : Tin plated
05 : Gold plated

Recommended PCB Layout (t=1.6mm)

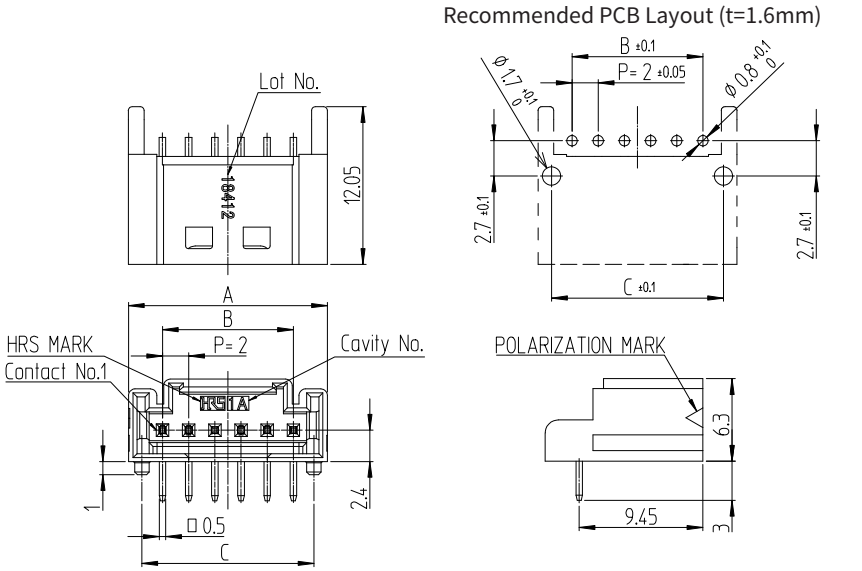

*The above drawing is of guide-boss type.

Unit : mm

Part No.	HRS No.	Guide-Boss	No. of Pos.	A	B	C	Purchase Unit
DF51KB-2P-2DS(8##)	CL0480-0587-0-##	With boss	2	7.2	2.0	5.14	420pcs per tray
DF51KB-3P-2DS(8##)	CL0480-0588-0-##	With boss	3	9.2	4.0	7.14	330pcs per tray
DF51K-4P-2DS(8##)	CL0480-0589-0-##	Without boss	4	11.2	6.0	-	270pcs per tray
DF51K-5P-2DS(8##)	CL0480-0590-0-##	Without boss	5	13.2	8.0	-	230pcs per tray
DF51K-6P-2DS(8##)	CL0480-0591-0-##	Without boss	6	15.2	10.0	-	200pcs per tray

Oct.1.2025 Copyright 2025 HIROSE ELECTRIC CO., LTD. All Rights Reserved.

Double-row THT Header

Straight

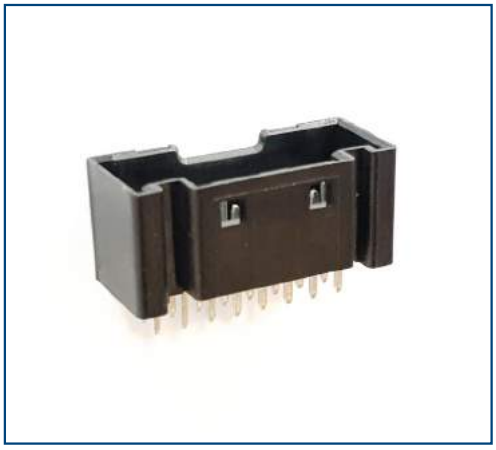

[Specification number] - ##, (8##)
00 : Tin plated
05 : Gold plated

Recommended PCB Layout (t=1.6mm)

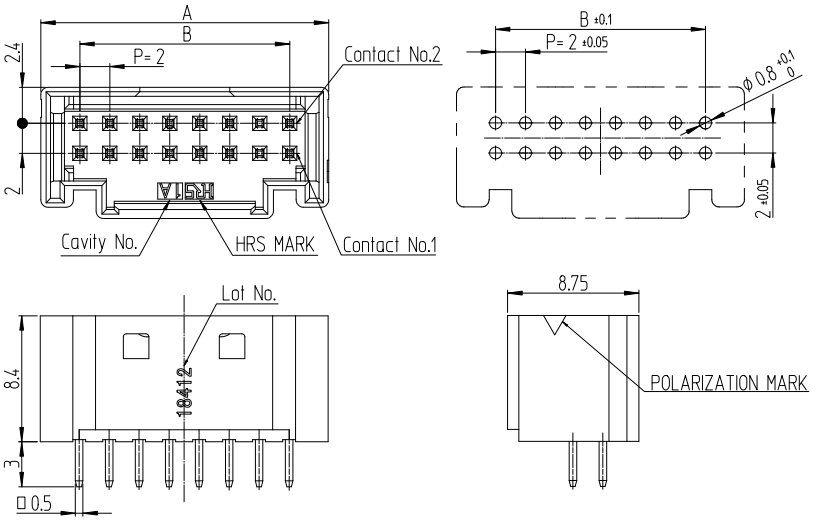

Unit : mm

Part No.	HRS No.	No. of Pos.	A	B	Purchase Unit
DF51K-4DP-2DSA(8##)	CL0480-0547-0-##	4	7.2	2.0	100pcs per bag
DF51K-6DP-2DSA(8##)	CL0480-0548-0-##	6	9.2	4.0	
DF51K-8DP-2DSA(8##)	CL0480-0549-0-##	8	11.2	6.0	
DF51K-10DP-2DSA(8##)	CL0480-0550-0-##	10	13.2	8.0	
DF51K-12DP-2DSA(8##)	CL0480-0551-0-##	12	15.2	10.0	
DF51K-14DP-2DSA(8##)	CL0480-0552-0-##	14	17.2	12.0	
DF51K-16DP-2DSA(8##)	CL0480-0553-0-##	16	19.2	14.0	
DF51K-18DP-2DSA(8##)	CL0480-0554-0-##	18	21.2	16.0	
DF51K-20DP-2DSA(8##)	CL0480-0555-0-##	20	23.2	18.0	
DF51K-22DP-2DSA(8##)	CL0480-0556-0-##	22	25.2	20.0	
DF51K-24DP-2DSA(8##)	CL0480-0557-0-##	24	27.2	22.0	
DF51K-26DP-2DSA(8##)	CL0480-0558-0-##	26	29.2	24.0	
DF51K-28DP-2DSA(8##)	CL0480-0559-0-##	28	31.2	26.0	
DF51K-30DP-2DSA(8##)	CL0480-0560-0-##	30	33.2	28.0	

Oct.1.2025 Copyright 2025 HIROSE ELECTRIC CO., LTD. All Rights Reserved.

Right Angle

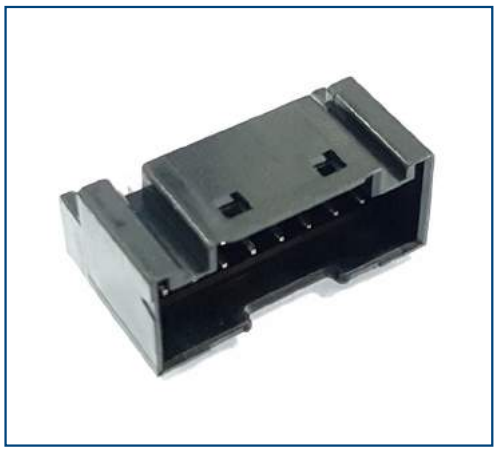

[Specification number] - ##, (8##)
00 : Tin plated
05 : Gold plated

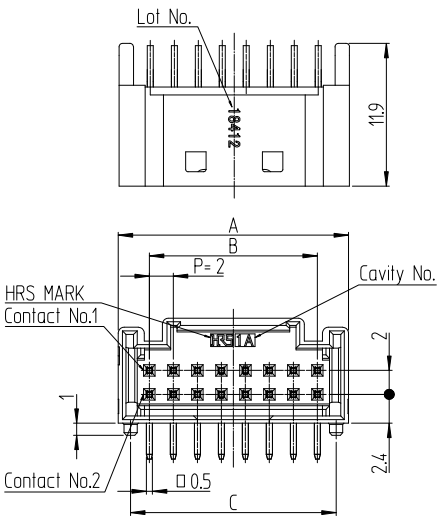

*The above drawing is of guide-boss type.

Recommended PCB Layout (t=1.6mm)

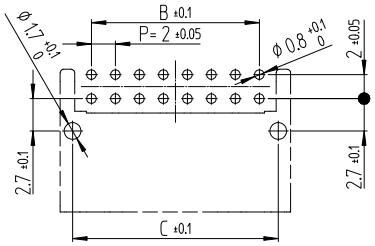

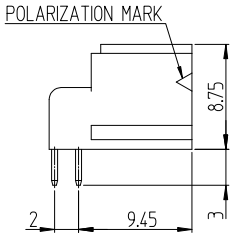

Unit : mm

Part No.	HRS No.	Guide-Boss	No. of Pos.	A	B	C	Purchase Unit
DF51KB-4DP-2DS(8##)	CL0480-0592-0-##	With boss	4	7.2	2.0	5.14	420pcs per tray
DF51KB-6DP-2DS(8##)	CL0480-0593-0-##	With boss	6	9.2	4.0	7.14	330pcs per tray
DF51K-8DP-2DS(8##)	CL0480-0594-0-##	Without boss	8	11.2	6.0	-	270pcs per tray
DF51K-10DP-2DS(8##)	CL0480-0595-0-##	Without boss	10	13.2	8.0	-	230pcs per tray
DF51K-12DP-2DS(8##)	CL0480-0596-0-##	Without boss	12	15.2	10.0	-	200pcs per tray
DF51K-14DP-2DS(8##)	CL0480-0597-0-##	Without boss	14	17.2	12.0	-	170pcs per tray
DF51K-16DP-2DS(8##)	CL0480-0598-0-##	Without boss	16	19.2	14.0	-	150pcs per tray
DF51K-18DP-2DS(8##)	CL0480-0599-0-##	Without boss	18	21.2	16.0	-	140pcs per tray
DF51K-20DP-2DS(8##)	CL0480-0600-0-##	Without boss	20	23.2	18.0	-	130pcs per tray
DF51K-22DP-2DS(8##)	CL0480-0601-0-##	Without boss	22	25.2	20.0	-	120pcs per tray
DF51K-24DP-2DS(8##)	CL0480-0602-0-##	Without boss	24	27.2	22.0	-	110pcs per tray
DF51K-26DP-2DS(8##)	CL0480-0603-0-##	Without boss	26	29.2	24.0	-	100pcs per tray
DF51K-28DP-2DS(8##)	CL0480-0604-0-##	Without boss	28	31.2	26.0	-	90pcs per tray
DF51K-30DP-2DS(8##)	CL0480-0605-0-##	Without boss	30	33.2	28.0	-	90pcs per tray

Oct.1.2025 Copyright 2025 HIROSE ELECTRIC CO., LTD. All Rights Reserved.

Single-row SMT Header

Straight

Recommended PCB Layout (t=1.6mm)

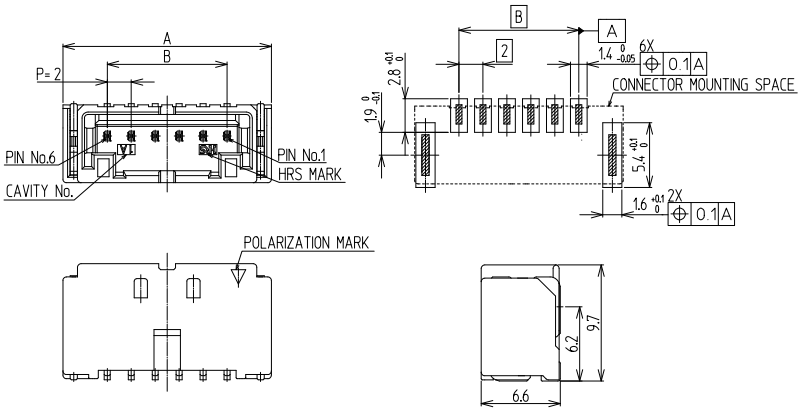

[Specification number] - ##, (8##)
00 : Tin plated
05 : Gold plated

Unit : mm

Part No.	HRS No.	No. of Pos.	A	B	Purchase Unit
DF51K-2P-2V(8##)	CL0480-0949-0-##	2	9.4	2.0	350pcs per reel
DF51K-3P-2V(8##)	Under Planning (Note)	3	11.4	4.0	-
DF51K-4P-2V(8##)	CL0480-1027-0-##	4	13.4	6.0	350pcs per reel
DF51K-5P-2V(8##)	Under Planning (Note)	5	15.4	8.0	-
DF51K-6P-2V(8##)	CL0480-0950-0-##	6	17.4	10.0	350pcs per reel

Note : Products without HRS No. are currently being planned for development. Please contact a Hirose representative regarding questions on pin count variation development.

Right Angle

Recommended PCB Layout (t=1.6mm)

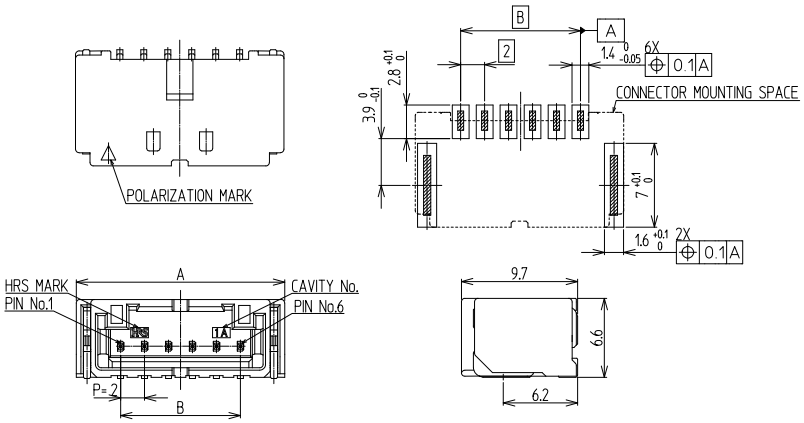

[Specification number] - ##, (8##)
00 : Tin plated
05 : Gold plated

Unit : mm

Part No.	HRS No.	No. of Pos.	A	B	Purchase Unit
DF51K-2P-2H(8##)	CL0480-0944-0-##	2	9.4	2.0	530pcs per reel
DF51K-3P-2H(8##)	Under Planning (Note)	3	11.4	4.0	-
DF51K-4P-2H(8##)	CL0480-1024-0-##	4	13.4	6.0	530pcs per reel
DF51K-5P-2H(8##)	Under Planning (Note)	5	15.4	8.0	-
DF51K-6P-2H(8##)	CL0480-0945-0-##	6	17.4	10.0	530pcs per reel

Note : Products without HRS No. are currently being planned for development. Please contact a Hirose representative regarding questions on pin count variation development.

Oct.1.2025 Copyright 2025 HIROSE ELECTRIC CO., LTD. All Rights Reserved.

Double-row SMT Header

Straight

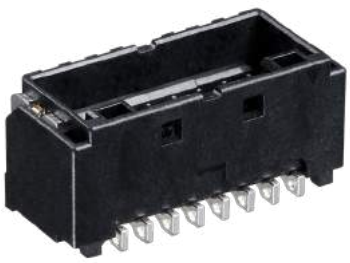

[Specification number] - ##, (8##)
00 : Tin plated
05 : Gold plated

Recommended PCB Layout (t=1.6mm)

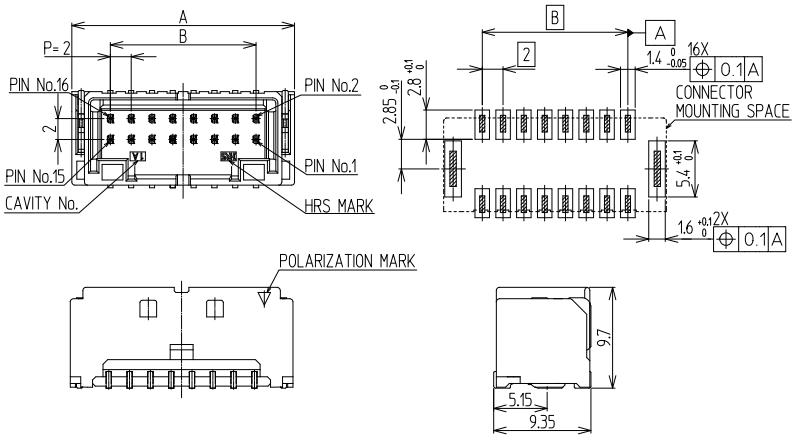

Unit : mm

Part No.	HRS No.	No. of Pos.	A	B	Purchase Unit
DF51K-4DP-2V(8##)	CL0480-0951-0-##	4	9.4	2.0	350pcs per reel
DF51K-16DP-2V(8##)	CL0480-0952-0-##	16	21.4	14.0	
DF51K-30DP-2V(8##)	CL0480-0953-0-##	30	35.4	28.0	

Right Angle

[Specification number] - ##, (8##)
00 : Tin plated
05 : Gold plated

Recommended PCB Layout (t=1.6mm)

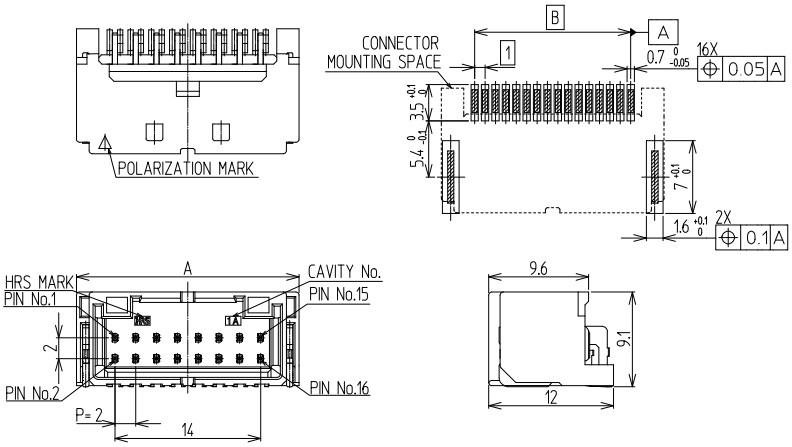

Unit : mm

Part No.	HRS No.	No. of Pos.	A	B	Purchase Unit
DF51K-4DP-2H(8##)	CL0480-0946-0-##	4	9.4	2.0	300pcs per reel
DF51K-16DP-2H(8##)	CL0480-0947-0-##	16	21.4	14.0	
DF51K-30DP-2H(8##)	CL0480-0948-0-##	30	35.4	28.0	

Oct.1.2025 Copyright 2025 HIROSE ELECTRIC CO., LTD. All Rights Reserved.

Crimp Socket

Single-row

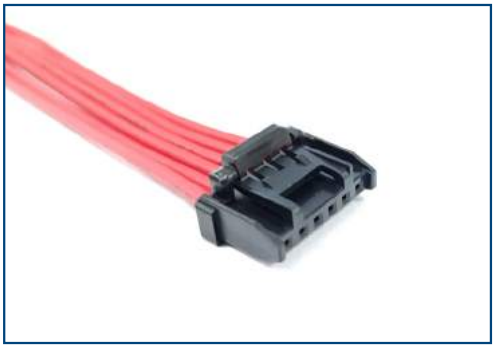

Shown with crimp contact inserted.

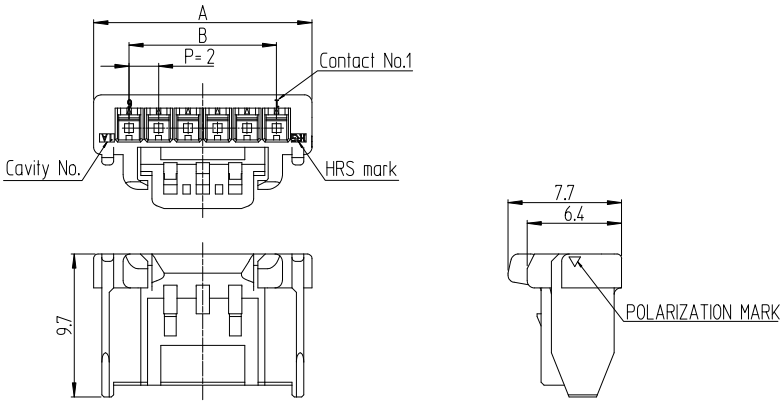

Unit : mm

Part No.	HRS No.	No. of Pos.	A	B	Purchase Unit
DF51K-2S-2C(800)	CL0480-0561-0-00	2	6.8	2.0	100pcs per bag
DF51K-3S-2C(800)	CL0480-0562-0-00	3	8.8	4.0	
DF51K-4S-2C(800)	CL0480-0563-0-00	4	10.8	6.0	
DF51K-5S-2C(800)	CL0480-0564-0-00	5	12.8	8.0	
DF51K-6S-2C(800)	CL0480-0565-0-00	6	14.8	10.0	

Double-row

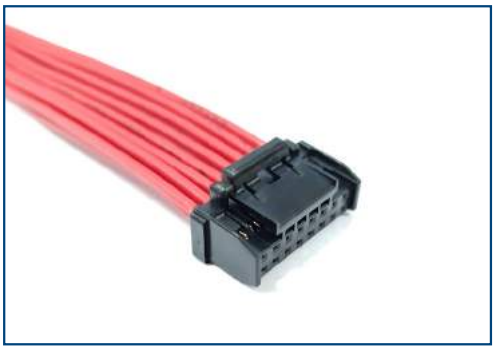

Shown with crimp contact inserted.

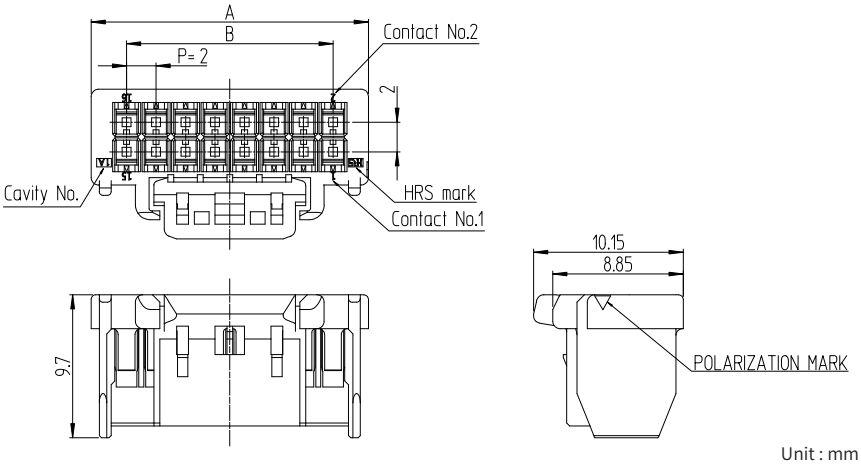

Unit : mm

Part No.	HRS No.	No. of Pos.	A	B	Purchase Unit
DF51K-4DS-2C(800)	CL0480-0567-0-00	4	6.8	2.0	100pcs per bag
DF51K-6DS-2C(800)	CL0480-0568-0-00	6	8.8	4.0	
DF51K-8DS-2C(800)	CL0480-0569-0-00	8	10.8	6.0	
DF51K-10DS-2C(800)	CL0480-0570-0-00	10	12.8	8.0	
DF51K-12DS-2C(800)	CL0480-0571-0-00	12	14.8	10.0	
DF51K-14DS-2C(800)	CL0480-0572-0-00	14	16.8	12.0	
DF51K-16DS-2C(800)	CL0480-0573-0-00	16	18.8	14.0	
DF51K-18DS-2C(800)	CL0480-0574-0-00	18	20.8	16.0	
DF51K-20DS-2C(800)	CL0480-0575-0-00	20	22.8	18.0	
DF51K-22DS-2C(800)	CL0480-0576-0-00	22	24.8	20.0	
DF51K-24DS-2C(800)	CL0480-0577-0-00	24	26.8	22.0	
DF51K-26DS-2C(800)	CL0480-0578-0-00	26	28.8	24.0	
DF51K-28DS-2C(800)	CL0480-0579-0-00	28	30.8	26.0	
DF51K-30DS-2C(800)	CL0480-0580-0-00	30	32.8	28.0	

Oct.1.2025 Copyright 2025 HIROSE ELECTRIC CO., LTD. All Rights Reserved.

Socket Contact

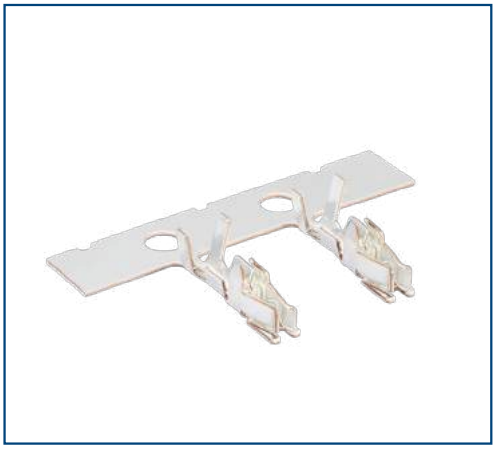

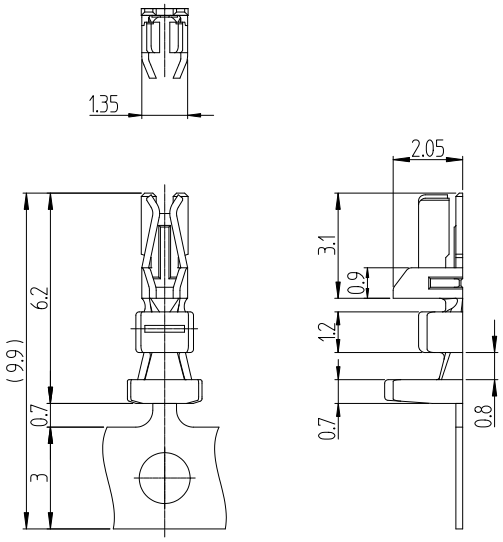

Unit : mm

Part No.	HRS No.	Finish	Purchase Unit
DF51K-22SCF(800)	CL0480-0581-0-00	Tin plated	10,000pcs per reel
DF51K-22SC(800)	CL0480-0582-0-00		100pcs per bag
DF51K-2428SCF(800)	CL0480-0583-0-00		10,000pcs per reel
DF51K-2428SC(800)	CL0480-0584-0-00		100pcs per bag
DF51K-30SCF(800)	CL0480-0585-0-00		10,000pcs per reel
DF51K-30SC(800)	CL0480-0586-0-00		100pcs per bag
DF51K-22SCFA(800)	CL0480-0612-0-00	Gold plated	10,000pcs per reel
DF51K-22SCA(800)	CL0480-0613-0-00		100pcs per bag
DF51K-2428SCFA(800)	CL0480-0614-0-00		10,000pcs per reel
DF51K-2428SCA(800)	CL0480-0615-0-00		100pcs per bag
DF51K-30SCFA(800)	CL0480-0616-0-00		10,000pcs per reel
DF51K-30SCA(800)	CL0480-0617-0-00		100pcs per bag

Applicable Wire (Tin Plated Annealed Copper Wire)

UL	Wire Size (Stranded Wire Structure)	Jacket Diameter
1061	22 AWG (17 pieces / 0.16mm)	Ø1.2 to Ø1.45mm
1007	24 AWG (11 pieces / 0.16mm)	Ø0.9 to Ø1.45mm
	26 AWG (7 pieces / 0.16mm)	
	28 AWG (7 pieces / 0.127mm)	
1061	30 AWG (7 pieces / 0.1mm)	Ø0.8mm

Note 1 : Applicable Tool : Applicator
Note 2 : Contact your Hirose representative when considering usage of non-applicable wires.

Oct.1.2025 Copyright 2025 HIROSE ELECTRIC CO., LTD. All Rights Reserved.

Mated Dimensions

Wire-to-Board Connection Using the Straight THT Header

[Single-row]

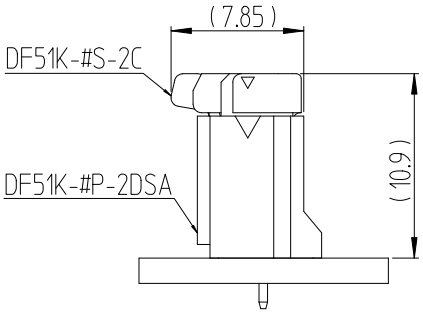

[Double-row]

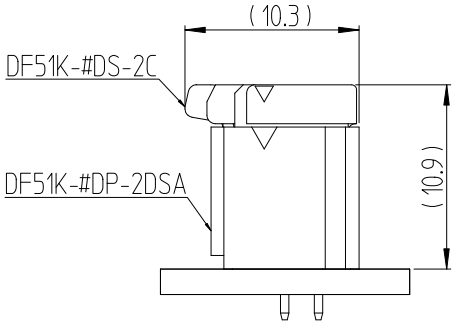

Wire-to-Board Connection Using the Right Angle THT Header

[Single-row]

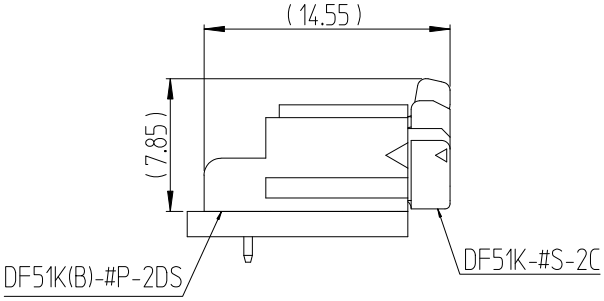

[Double-row]

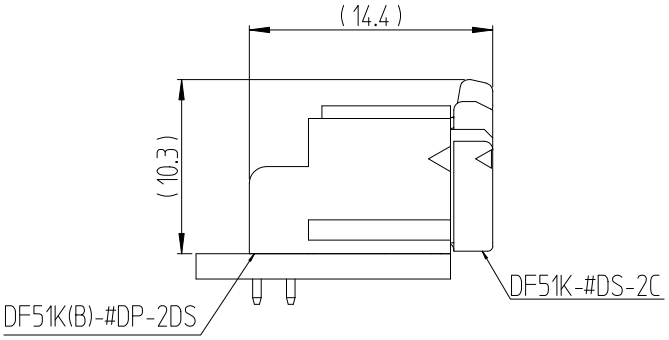

Wire-to-Board Connection Using the Straight SMT Header

[Single-row]

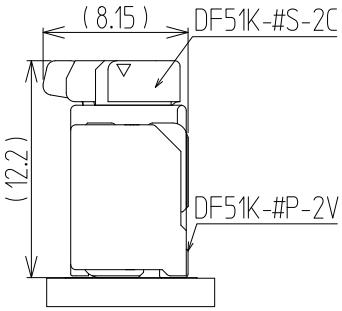

[Double-row]

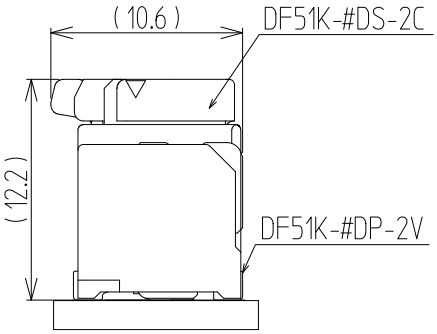

Wire-to-Board Connection Using the Right Angle SMT Header

[Single-row]

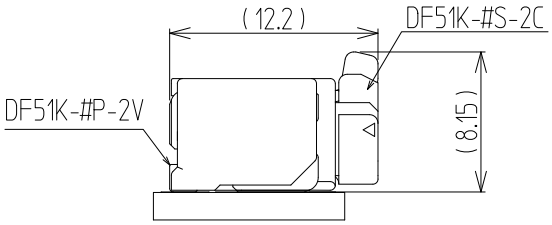

[Double-row]

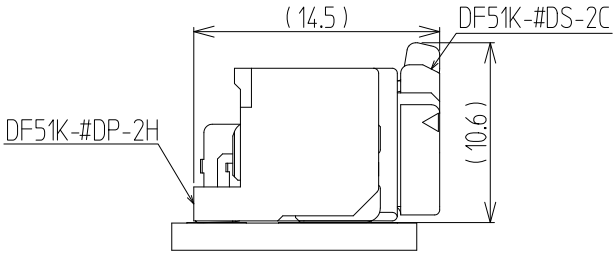

Oct.1.2025 Copyright 2025 HIROSE ELECTRIC CO., LTD. All Rights Reserved.

Applicable Crimping Tools

Type	Part No.	HRS No.	Applicable Contacts
Applicator	AP105-DF11-22S	CL0901-4529-7-00	DF51K-22SCF/SCFA
	AP105-DF11-2428S	CL0901-4511-1-00	DF51K-2428SCF/SCFA
	AP105-DF11-30S	CL0901-4532-1-00	DF51K-30SCF/SCFA
Automatic Crimp Press	CM-105C	CL0901-0001-0-00	-
Hand Tool	HT801/DF11-22S(A)	CL0550-0407-5-00	DF51K-22SC/SCA
	HT801/DF11-2428S(A)	CL0550-0403-4-00	DF51K-2428SC/SCA
	HT801/DF11-30S(A)	CL0550-0408-8-00	DF51K-30SC/SCA
Contact Extraction Tool	DF-C-PO(B)	CL0550-0179-2-00	DF51K-22SC(F)(A) DF51K-2428SC(F)(A) DF51K-30SC(F)(A)

Note 1 : Please conduct crimping work according to the "Crimp Quality Standard" and "Crimp Condition Table".
Note 2 : Any problems that occur from using tools other than those specified by Hirose are not covered by warranty.
Note 3 : Please contact Hirose for information about hand tooling.

Precautions for use

1. The connector could be damaged if pulled out forcibly. When it is hard to pull out, push it in slightly first and then depress the lock and un-mate.
   Please refer to "DF51K mating and unmating Procedure Document (DOC180208-010)" for points in handling regarding mating operations.

2. When mating a crimped contact into a socket, please refrain from inserting it diagonally in order to maintain performance reliability. Please refer to the "Harness procedure manual (DOC180330-002)" for points in harness operations.

Operating Environment

Please contact a Hirose representative if you are designing this connector into environmental conditions where high and low temperatures are repeated.

While taking into consideration

Specifications mentioned in this catalog are reference values.
When considering to order or use this product, please review the Drawing and Product Specifications sheets.
Use an appropriate cable when using the connector in combination with cables.
If considering usage of a non-specified cable, please contact your sales representative.
If assembly process is done by jigs & tools which are not identified by Hirose, the warranty of the product may be affected.
If considering usage for below mentioned applications, please contact your sales representative.
In cases where the application will demand a high level of reliability, such as automotive, medical instruments, public infrastructure, aerospace/ defense etc. Hirose must review before assurance of reliability can be given.

Oct.1.2025 Copyright 2025 HIROSE ELECTRIC CO., LTD. All Rights Reserved.

HIROSE ELECTRIC CO., LTD. 2-6-3,Nakagawa Chuoh,Tsuzuki-Ku,Yokohama-Shi 224-8540,JAPAN
https://www.hirose.com/

※ The contents of this catalog are current as of date of 03/ 2024. Contents are subject to change without notice for the purpose of improvements.
※ The HRS logo and "HIROSE" are trademarks of HIROSE ELECTRIC CO., LTD.