THIS DRAWING IS UNPUBLISHED. RELEASED FOR PUBLICATION 20
© COPYRIGHT 20 BY - ALL RIGHTS RESERVED.

REVISIONS

P	LTR	DESCRIPTION	DATE	DWN	APVD
	A	INITIAL RELEASE	05JAN2016	JY	SH

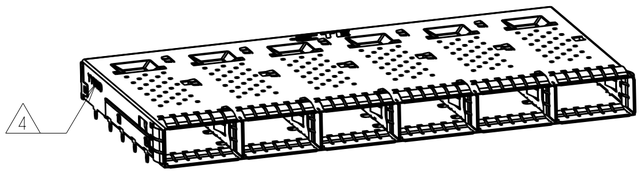

2170706-1,-4 AS SHOWN
SCALE 1:1

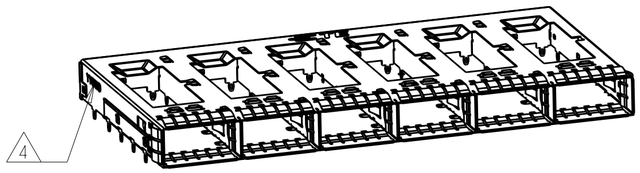

2170706-2,-5 AS SHOWN
SCALE 1:1

1. COMPONENTS
   CAGE ASSEMBLY: NICKEL-SILVER ALLOY
   EMI SPRING: COPPER ALLOY/NICKEL PLATE

2. REFERENCE APPLICATION SPECIFICATION 114-32023 FOR RECOMMENDED DRILL HOLE DIAMETER AND PLATING THICKNESS

3. DATUM AND BASIC DIMENSION ESTABLISHED BY CUSTOMER

4. DATE CODE (YYWWD) MARKED APPROXIMATELY AS SHOWN.

5. MATES WITH QSFP28 MSA COMPATIBLE TRANSCEIVER.

6. MINIMUM PC BOARD THICKNESS:
   SINGLE SIDED: 1.57 MIN
   DOUBLE SIDED: 3.00 MIN

7. DATUM -A- IS TOP SURFACE OF THE HOST BOARD.

8. THESE HOLES ARE OPTIONAL WHEN THE REAR PINS ARE REMOVED.

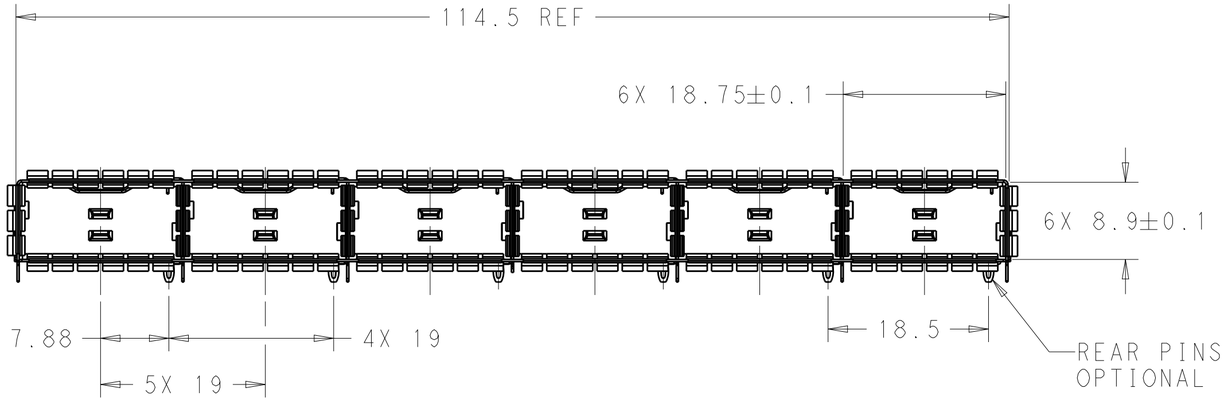

SCALE 2:1

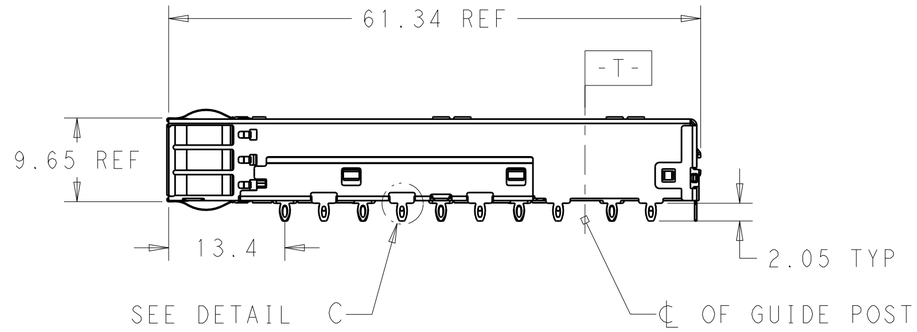

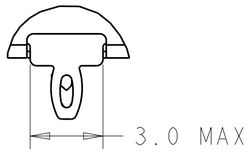

DETAIL C
SCALE 6:1

WITHOUT	WITH	2170706-5
WITHOUT	WITHOUT	2170706-4
WITH	WITH	2170706-2
WITH	WITHOUT	2170706-1
REAR PIN OPTIONAL	HEAT SINK OPEN OPTIONAL	PART NUMBER

THIS DRAWING IS A CONTROLLED DOCUMENT.

DIMENSIONS: mm

TOLERANCES UNLESS OTHERWISE SPECIFIED:
0 PLC ±-
1 PLC ±0.25
2 PLC ±0.2
3 PLC ±-
4 PLC ±-
ANGLES ±-

MATERIAL: SEE NOTES -
FINISH: SEE NOTES -

DWN JASON YANG 24OCT2013
CHK SEAN HAN 05JAN2016
APVD -
PRODUCT SPEC 108-19428
APPLICATION SPEC 114-32023
WEIGHT -

TE Connectivity

NAME: RECEPTACLE CAGE ASSEMLBY THRU BEZEL, 1X6, QSFP28

SIZE A2 | CAGE CODE 00779 | DRAWING NO C-2170706 | RESTRICTED TO -

CUSTOMER DRAWING | SCALE 1:1 | SHEET 1 OF 5 | REV A

THIS DRAWING IS UNPUBLISHED. RELEASED FOR PUBLICATION 20
© COPYRIGHT 20 BY - ALL RIGHTS RESERVED.

REVISIONS

P	LTR	DESCRIPTION	DATE	DWN	APVD
	-	SEE SHEET 1	-	-	-

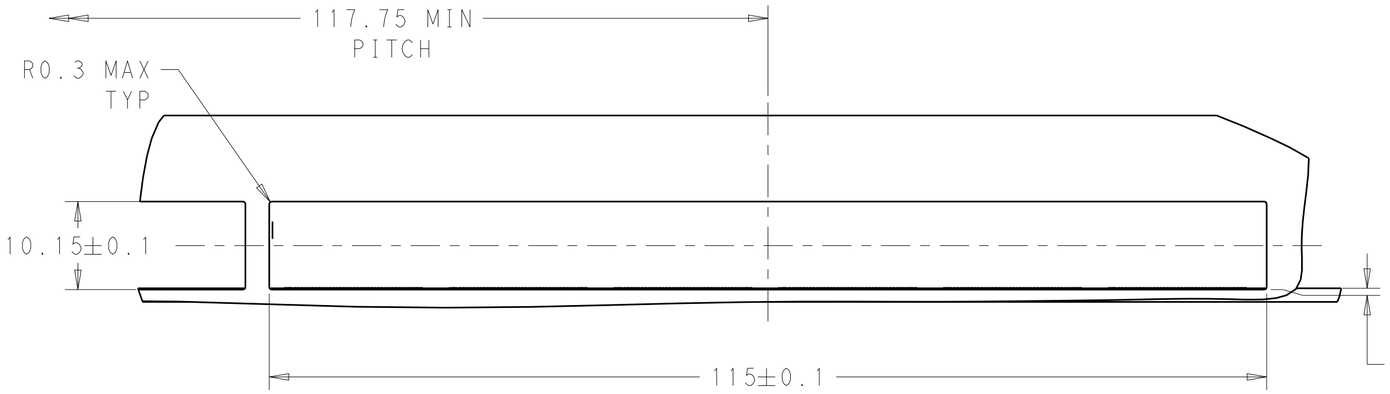

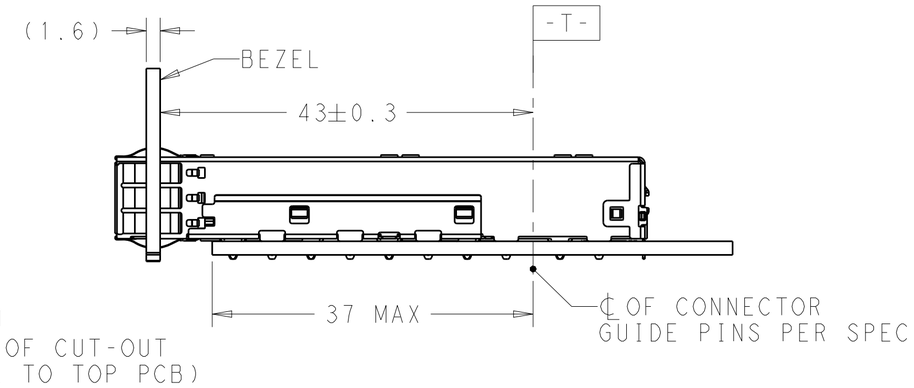

SINGLE SIDE MOUNTING
SCALE 2:1

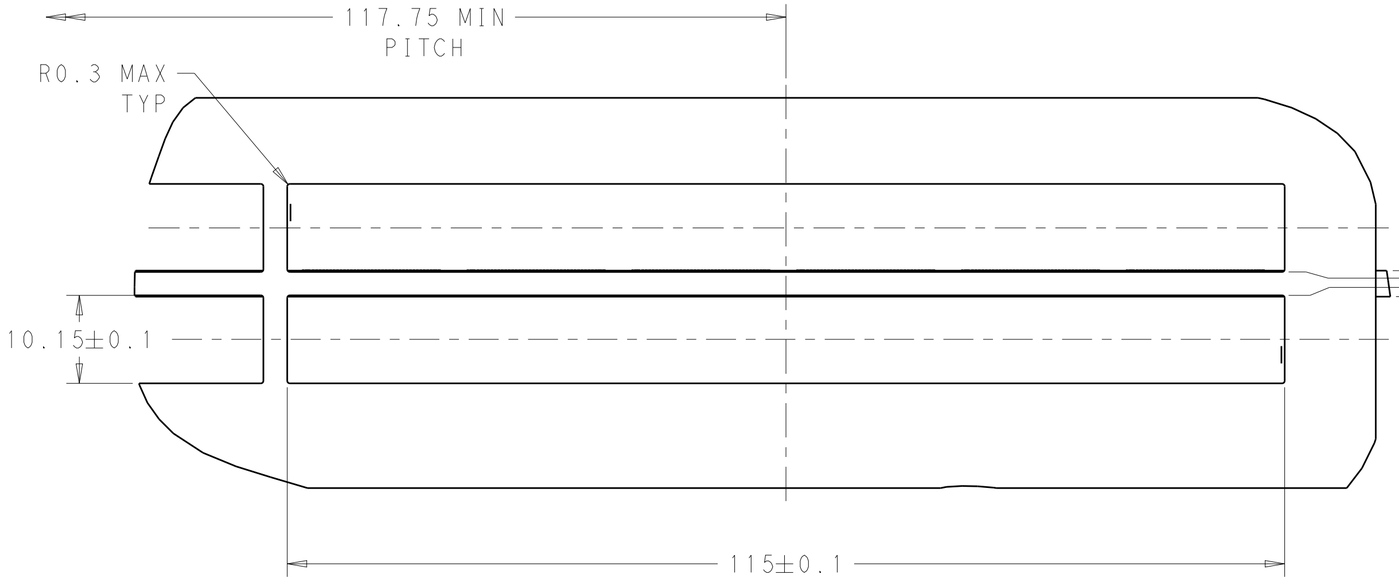

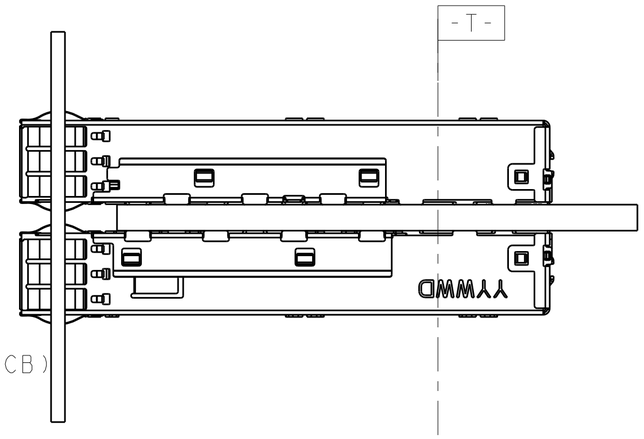

BELLY TO BELLY MOUNTING
SCALE 2:1

THIS DRAWING IS A CONTROLLED DOCUMENT.

DIMENSIONS: mm

TOLERANCES UNLESS OTHERWISE SPECIFIED:
0 PLC ±-
1 PLC ±0.25
2 PLC ±0.2
3 PLC ±-
4 PLC ±-
ANGLES ±-

MATERIAL SEE NOTES -
FINISH SEE NOTES -

DWN JASON YANG 24OCT2013
CHK SEAN HAN 05JAN2016
APVD -
PRODUCT SPEC 108-19428
APPLICATION SPEC 114-32023
WEIGHT -
CUSTOMER DRAWING

TE Connectivity

NAME RECEPTACLE CAGE ASSEMLBY THRU BEZEL, 1X6, QSFP28

SIZE	CAGE CODE	DRAWING NO	RESTRICTED TO
A2	00779	C-2170706	-

SCALE 1:1 SHEET 1 OF 5 REV A

1471-9 (3/13)

THIS DRAWING IS UNPUBLISHED. RELEASED FOR PUBLICATION 20
© COPYRIGHT 20 BY - ALL RIGHTS RESERVED.

REVISIONS

P	LTR	DESCRIPTION	DATE	DWN	APVD
	-	SEE SHEET 1	-	-	-

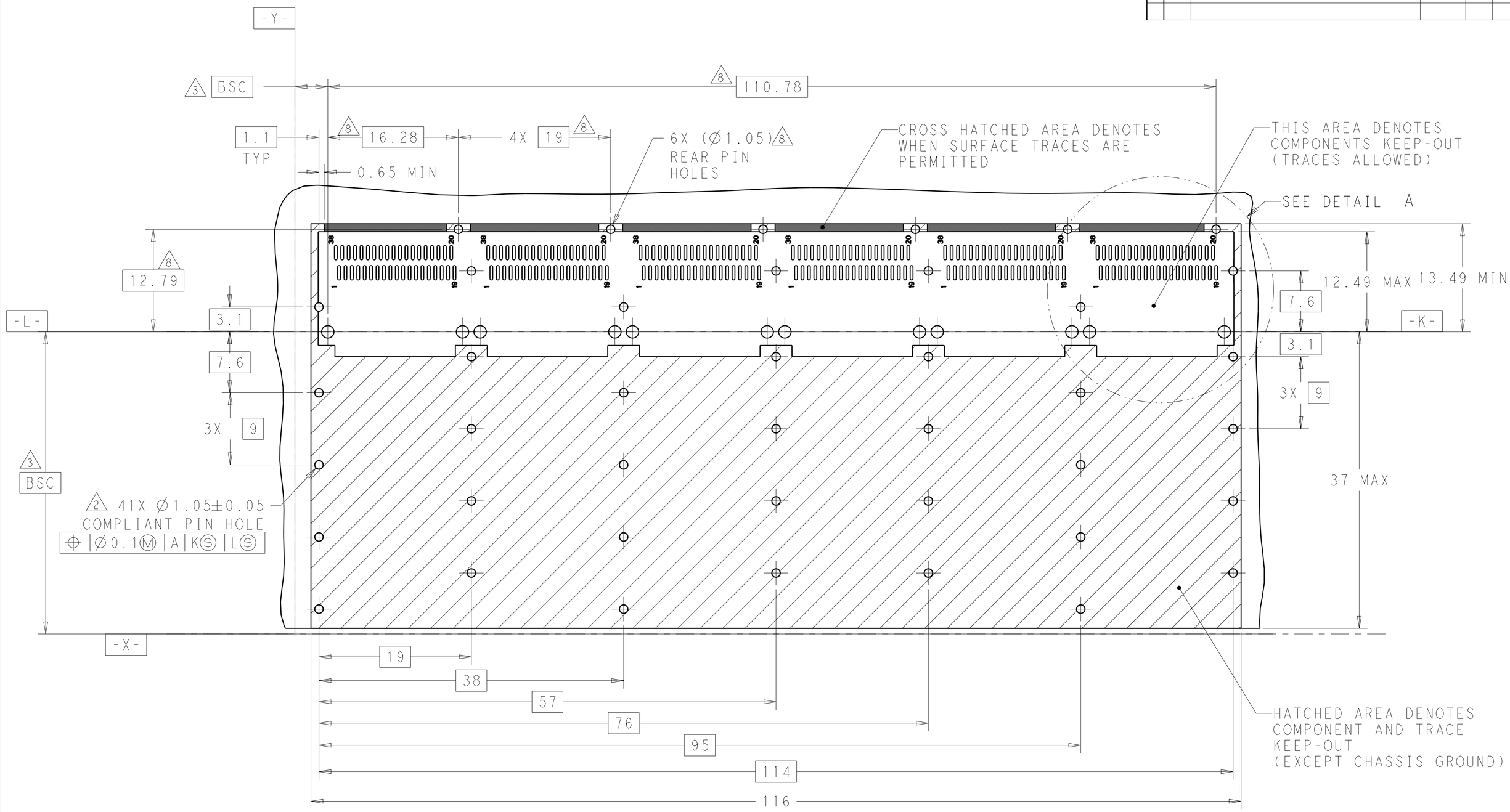

RECOMMENDED PCB LAYOUT
SINGLE TYPE
PCB TOLERANCE: ±0.05
SCALE 3:1

THIS DRAWING IS A CONTROLLED DOCUMENT.

DIMENSIONS: mm

TOLERANCES UNLESS OTHERWISE SPECIFIED:
0 PLC ±-
1 PLC ±0.25
2 PLC ±0.2
3 PLC ±-
4 PLC ±-
ANGLES ±-

MATERIAL: SEE NOTES -
FINISH: SEE NOTES -

DWN JASON YANG 24OCT2013
CHK SEAN HAN 05JAN2016
APVD -
PRODUCT SPEC 108-19428
APPLICATION SPEC 114-32023
WEIGHT -
CUSTOMER DRAWING

TE Connectivity

NAME: RECEPTACLE CAGE ASSEMLBY THRU BEZEL, 1X6, QSFP28

SIZE	CAGE CODE	DRAWING NO	RESTRICTED TO
A2	00779	C-2170706	-

SCALE 1:1 SHEET 1 OF 5 REV A

1471-9 (3/13)

THIS DRAWING IS UNPUBLISHED. RELEASED FOR PUBLICATION 20
© COPYRIGHT 20 BY - ALL RIGHTS RESERVED.

REVISIONS

P	LTR	DESCRIPTION	DATE	DWN	APVD
	-	SEE SHEET 1	-	-	-

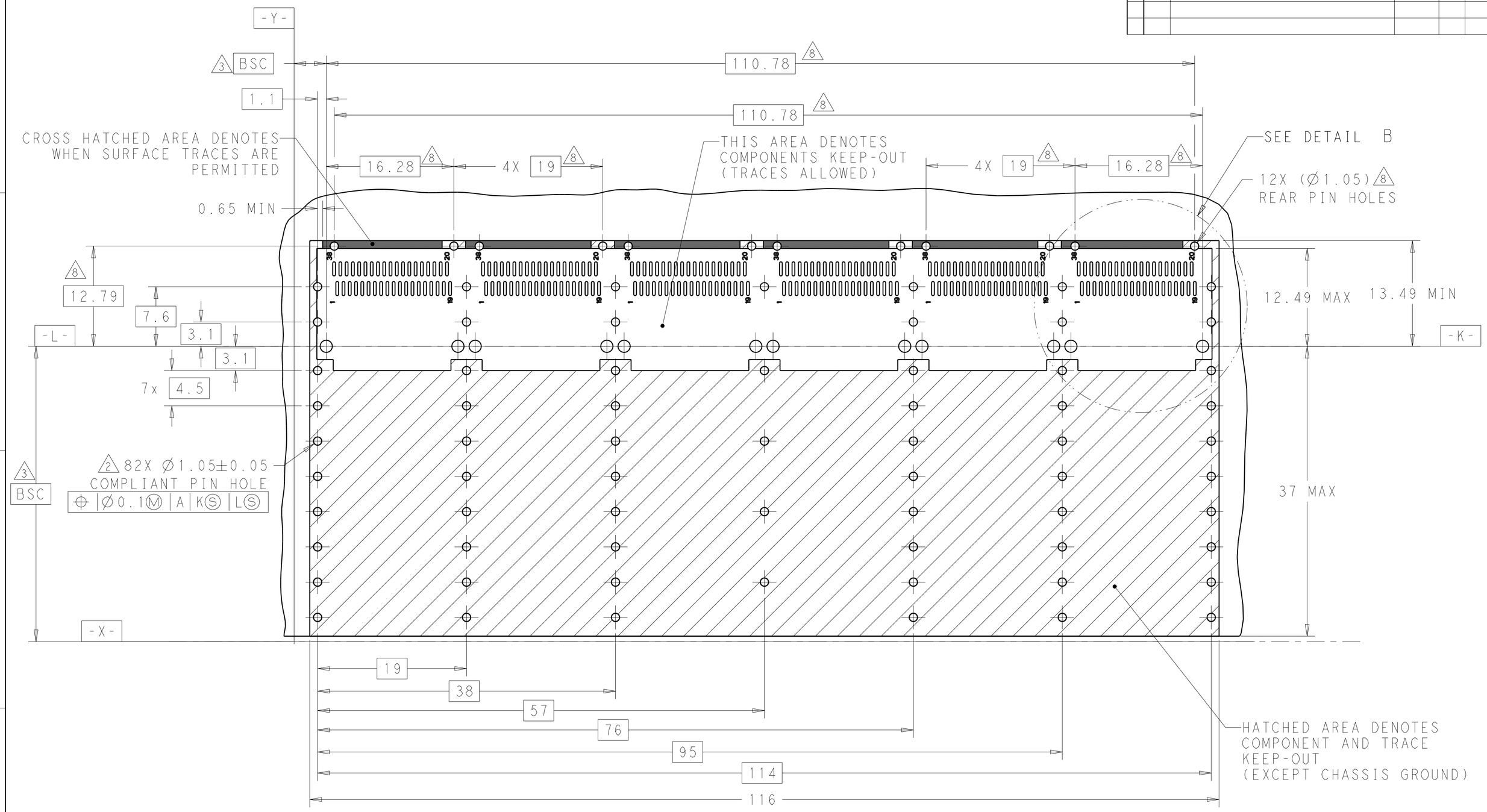

RECOMMENDED PCB LAYOUT
BELLY TO BELLY TYPE
PCB TOLERANCE: ±0.05
SCALE 3:1

THIS DRAWING IS A CONTROLLED DOCUMENT.

DIMENSIONS: mm

TOLERANCES UNLESS OTHERWISE SPECIFIED:
0 PLC ±-
1 PLC ±0.25
2 PLC ±0.2
3 PLC ±-
4 PLC ±-
ANGLES ±-

MATERIAL: SEE NOTES -
FINISH: SEE NOTES -

DWN JASON YANG 24OCT2013
CHK SEAN HAN 05JAN2016
APVD -
PRODUCT SPEC 108-19428
APPLICATION SPEC 114-32023
WEIGHT -
CUSTOMER DRAWING

TE Connectivity

NAME: RECEPTACLE CAGE ASSEMLBY THRU BEZEL, 1X6, QSFP28

SIZE	CAGE CODE	DRAWING NO	RESTRICTED TO
A2	00779	C-2170706	-

SCALE 1:1 SHEET 1 OF 5 REV A

1471-9 (3/13)

THIS DRAWING IS UNPUBLISHED. RELEASED FOR PUBLICATION 20
© COPYRIGHT 20 BY - ALL RIGHTS RESERVED.

REVISIONS

P	LTR	DESCRIPTION	DATE	DWN	APVD
	-	SEE SHEET 1	-	-	-

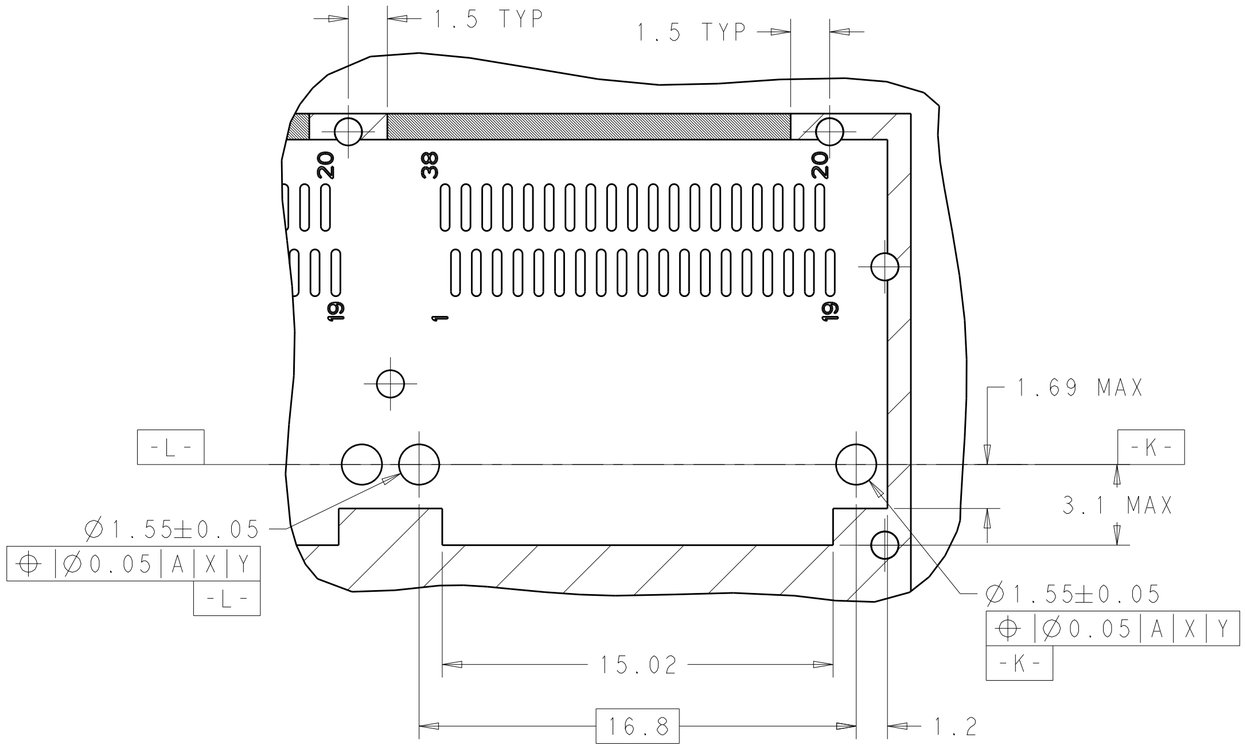

DETAIL A
SCALE 6:1

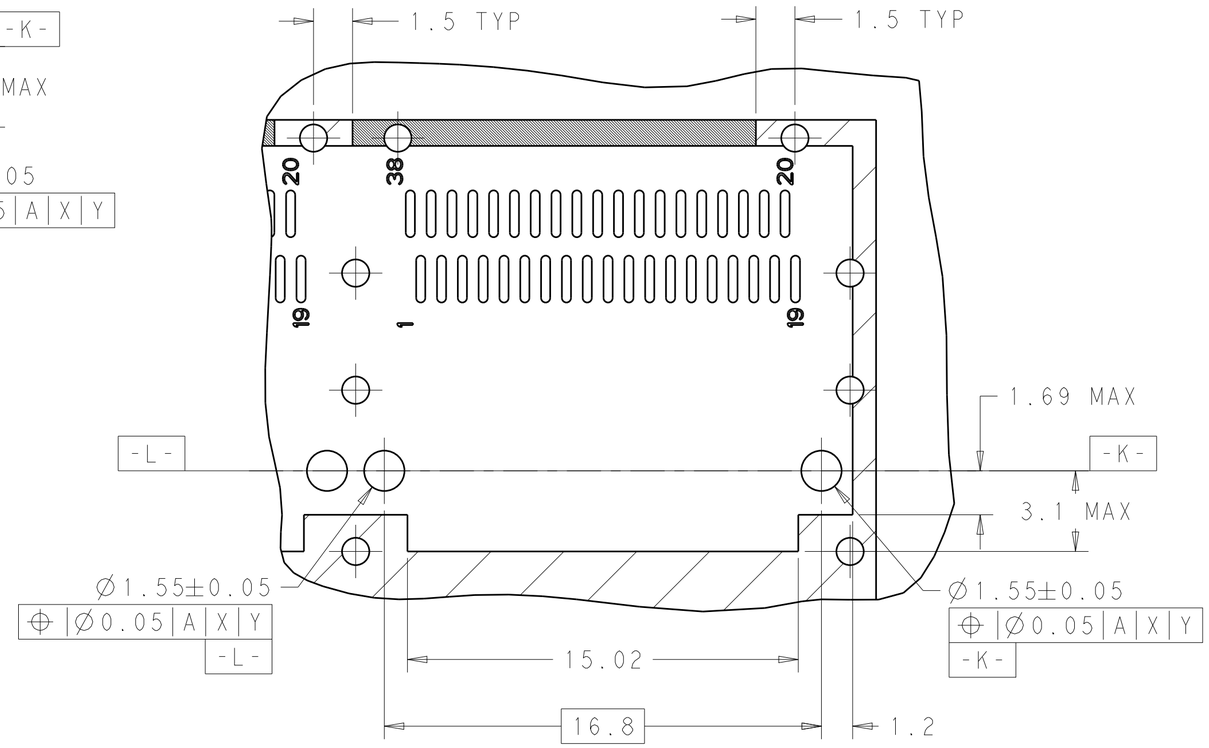

DETAIL B
SCALE 6:1

THIS DRAWING IS A CONTROLLED DOCUMENT.

DIMENSIONS: mm

TOLERANCES UNLESS OTHERWISE SPECIFIED:
0 PLC ±-
1 PLC ±0.25
2 PLC ±0.2
3 PLC ±-
4 PLC ±-
ANGLES ±-

MATERIAL: SEE NOTES -
FINISH: SEE NOTES -

DWN JASON YANG 24OCT2013
CHK SEAN HAN 05JAN2016
APVD -
PRODUCT SPEC 108-19428
APPLICATION SPEC 114-32023
WEIGHT -

TE Connectivity

NAME: RECEPTACLE CAGE ASSEMLBY THRU BEZEL, 1X6, QSFP28

SIZE	CAGE CODE	DRAWING NO	RESTRICTED TO
A2	00779	C-2170706	-

CUSTOMER DRAWING | SCALE 1:1 | SHEET 1 OF 5 | REV A

1471-9 (3/13)