HAOYU

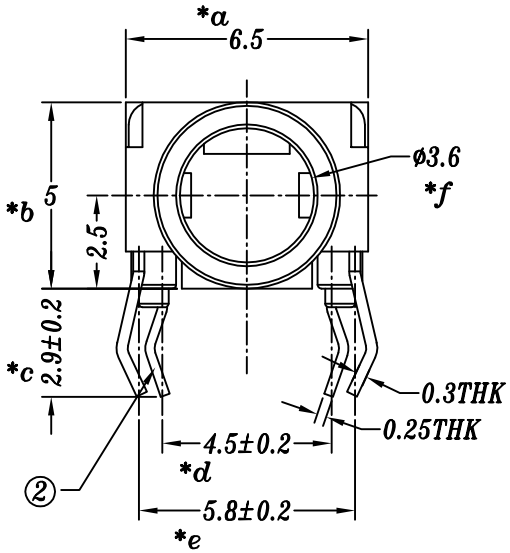

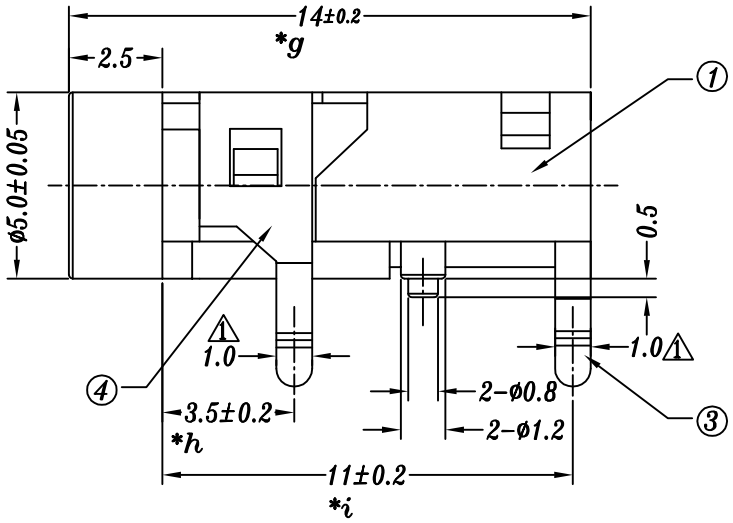

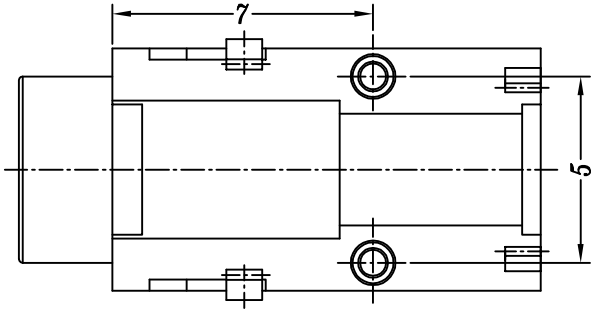

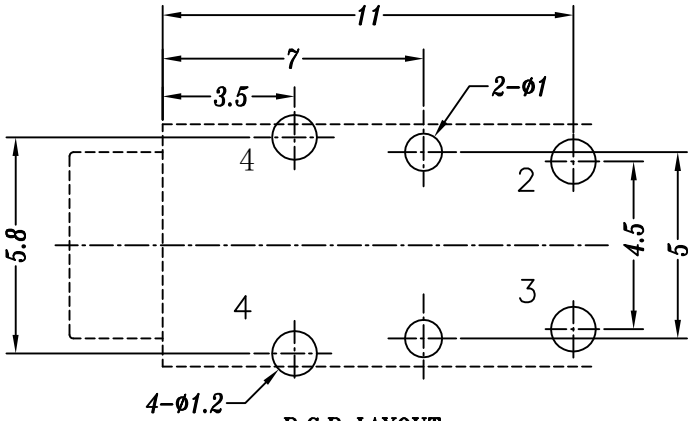

P.C.B LAYOUT

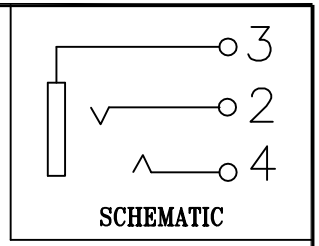

SCHEMATIC

NO.	PART NAME	MATERIAL	QTY	FINISHING
4	PJ321 4#COVER	PBS	1	Ag/Au/Ni-PLATED ②
3	PJ321 3#CONTACT	PBS STRIP	1	Ag/Au/Ni-PLATED ②
2	PJ321 2#CONTACT	PBS STRIP	1	Ag/Au/Ni-PLATED ②
1	PJ321 CASE	PBT/PA6T	1	BLACK

TOLERANCE UNLESS SPECIFIED

UP TO 5mm: ±0.1
ABOVE 5mm: ±0.2
ANGULAR ±1°

NO	DATE	REVISIONS	BY	APPD
A2	2109.10.21	② 新增电镀规格	GYW	
A1	2017.4.10	① 新增PIN脚宽度标注	GYW	
A0	2012.2.15	首次发行	GYW	

TITLE:PHONE JACK
MODEL:PJ-321
UNIT : MM
SCALE: 5:1
ROHS COMPLIANT
DWN
CHK'D
APPD
PRO.AGL:
REV :A2

DONGGUANG HAOYU ELECTRONICS CO., LTD
皓宇 HOOYA
东莞市弘皓电子有限公司