PS 3.50/07/90 3.5SN BK BX

Weidmüller Interface GmbH & Co. KG
Klingenbergstraße 26
D-32758 Detmold
Germany

www.weidmueller.com

Product image

Similar to illustration

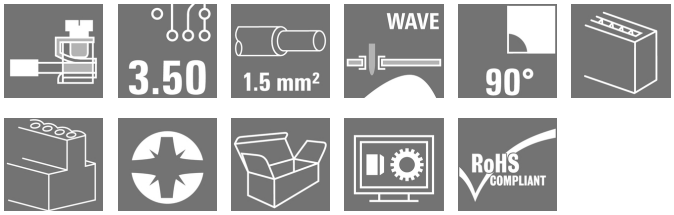

Very small and compact PCB terminal with leaf spring connection at 3.5 mm pitch, conductor outlet direction 90°. Suitable for conductor cross-sections up to 1.5 mm².

General ordering data

Version	Printed circuit board terminals, 3.50 mm, Number of poles: 7, 90°, Solder pin length (l): 3.5 mm, tinned, black, Pressure clamp connection, Clamping range, max. : 1.5 mm², Box
Order No.	1811230000
Type	PS 3.50/07/90 3.5SN BK BX
GTIN (EAN)	4032248290314
Qty.	100 pc(s).
Product data	IEC: 320 V / 17.5 A / 0.2 - 1.5 mm² UL: 300 V / 10 A / AWG 28 - AWG 16
Packaging	Box

Creation date September 16, 2022 12:09:03 PM CEST

PS 3.50/07/90 3.5SN BK BX

Weidmüller Interface GmbH & Co. KG
Klingenbergstraße 26
D-32758 Detmold
Germany

www.weidmueller.com

Technical data

Dimensions and weights

Depth	6.8 mm	Depth (inches)	0.268 inch
Height	11.9 mm	Height (inches)	0.469 inch
Height of lowest version	8.4 mm	Width	24.96 mm
Width (inches)	0.983 inch	Net weight	4.14 g

Environmental Product Compliance

REACH SVHC	Lead 7439-92-1	SCIP	92756f44-b3ae-437b-8a77-8ecb45fe4af6

System parameters

Product family	PS	Wire connection method	Pressure clamp connection
Mounting onto the PCB	THT solder connection	Conductor outlet direction	90°
Pitch in mm (P)	3.5 mm	Pitch in inches (P)	0.138 inch
Number of poles	7	Pin series quantity	1
Fitted by customer	Yes	Max. adjacent poles per row	24
Solder pin length (l)	3.5 mm	Solder pin dimensions	d = 0.8 mm
Solder eyelet hole diameter (D)	1.3 mm	Solder eyelet hole diameter tolerance (D)	+ 0,1 mm
Number of solder pins per pole	1	Screwdriver blade	0.4 x 2.5
Screwdriver blade standard	DIN 5264	Tightening torque, min.	0.2 Nm
Tightening torque, max.	0.25 Nm	Clamping screw	M 2
Stripping length	4 mm	L1 in mm	21 mm
L1 in inches	0.827 inch	Touch-safe protection acc. to DIN VDE 0470	IP 20
Touch-safe protection acc. to DIN VDE 57 106	Safe from finger touch	Protection degree	IP20

Material data

Insulating material	Wemid (PA)	Colour	black
Colour chart (similar)	RAL 9011	Insulating material group	I
Comparative Tracking Index (CTI)	≥ 600	UL 94 flammability rating	V-0
Contact material	Copper alloy	Contact surface	tinned
Coating	1-3 µm Ni, 4-6 µm SN	Layer structure of solder connection	1.5...3 µm Ni / 4...6 µm Sn
Storage temperature, min.	-40 °C	Storage temperature, max.	70 °C
Operating temperature, min.	-50 °C	Operating temperature, max.	120 °C
Temperature range, installation, min.	-25 °C	Temperature range, installation, max.	120 °C

PS 3.50/07/90 3.5SN BK BX

Weidmüller Interface GmbH & Co. KG
Klingenbergstraße 26
D-32758 Detmold
Germany

www.weidmueller.com

Technical data

Conductors suitable for connection

Clamping range, min.	0.08 mm²	Clamping range, max.	1.5 mm²
Wire connection cross section AWG, min.	AWG 28	Wire connection cross section AWG, max.	AWG 16
Solid, min. H05(07) V-U	0.2 mm²	Solid, max. H05(07) V-U	1.5 mm²
Flexible, min. H05(07) V-K	0.2 mm²	Flexible, max. H05(07) V-K	1.5 mm²
w. plastic collar ferrule, DIN 46228 pt 4, min.	0.25 mm²	w. plastic collar ferrule, DIN 46228 pt 4, max.	0.75 mm²
w. wire end ferrule, DIN 46228 pt 1, min.	0.25 mm²	w. wire end ferrule, DIN 46228 pt 1, max.	0.75 mm²
Reference text	Length of ferrules is to be chosen depending on the product and the rated voltage., The outside diameter of the plastic collar should not be larger than the pitch (P)		

Rated data acc. to IEC

tested acc. to standard	IEC 60664-1, IEC 61984	Rated current, min. number of poles (Tu=20°C)	17.5 A
Rated current, max. number of poles (Tu=20°C)	17.5 A	Rated current, min. number of poles (Tu=40°C)	17.5 A
Rated current, max. number of poles (Tu=40°C)	17.5 A	Rated voltage for surge voltage class / pollution degree II/2	320 V
Rated voltage for surge voltage class / pollution degree III/2	160 V	Rated voltage for surge voltage class / pollution degree III/3	160 V
Rated impulse voltage for surge voltage class/ pollution degree II/2	2.5 kV	Rated impulse voltage for surge voltage class/ pollution degree III/2	2.5 kV
Rated impulse voltage for surge voltage class/ contamination degree III/3	2.5 kV		

Rated data acc. to CSA

Institute (CSA)		Certificate No. (CSA)	200039-1815154
Rated voltage (Use group B / CSA)	300 V	Rated current (Use group B / CSA)	10 A
Wire cross-section, AWG, min.	AWG 28	Wire cross-section, AWG, max.	AWG 16
Reference to approval values	Specifications are maximum values, details - see approval certificate.		

Rated data acc. to UL 1059

Institute (cURus)		Certificate No. (cURus)	E60693
Rated voltage (Use group B / UL 1059)	300 V	Rated voltage (Use group D / UL 1059)	300 V
Rated current (Use group B / UL 1059)	10 A	Rated current (Use group D / UL 1059)	10 A
Wire cross-section, AWG, min.	AWG 28	Wire cross-section, AWG, max.	AWG 16
Reference to approval values	Specifications are maximum values, details - see approval certificate.		

PS 3.50/07/90 3.5SN BK BX

Weidmüller Interface GmbH & Co. KG
Klingenbergstraße 26
D-32758 Detmold
Germany

www.weidmueller.com

Technical data

Packing

Packaging	Box	VPE length	228 mm
VPE width	195 mm	VPE height	32 mm

Classifications

ETIM 6.0	EC002643	ETIM 7.0	EC002643
ETIM 8.0	EC002643	ECLASS 9.0	27-44-04-01
ECLASS 9.1	27-44-04-01	ECLASS 10.0	27-44-04-01
ECLASS 11.0	27-46-01-01	ECLASS 12.0	27-46-01-01

Important note

IPC conformity	Conformity: The products are developed, manufactured and delivered according international recognized standards and norms and comply with the assured properties in the data sheet resp. fulfill decorative properties in accordance with IPC-A-610 "Class 2". Further claims on the products can be evaluated on request.
Notes	• Rated current related to rated cross-section & min. No. of poles. • Wire end ferrule without plastic collar to DIN 46228/1 • Wire end ferrule with plastic collar to DIN 46228/4 • The data given under CSA relates to a cUL approval - E60693 • P on drawing = pitch • Rated data refer only to the component itself. Clearance and creepage distances to other components are to be designed in accordance with the relevant application standards. • Long term storage of the product with average temperature of 50 °C and average humidity 70%, 36 months

Approvals

Approvals	
ROHS	Conform
UL File Number Search	UL Website
Certificate No. (cURus)	E60693

PS 3.50/07/90 3.5SN BK BX

Weidmüller Interface GmbH & Co. KG
Klingenbergstraße 26
D-32758 Detmold
Germany

www.weidmueller.com

Technical data

Downloads

Approval/Certificate/Document of Conformity	Declaration of the Manufacturer
Engineering Data	WSCAD
Catalogues	Catalogues in PDF-format
Brochures	FL DRIVES EN FL ANALO.SIGN.CONV. EN MB DEVICE MANUF. EN FL DRIVES DE FL BUILDING SAFETY EN FL APPL LED LIGHTING EN FL INDUSTR.CONTROLS EN FL MACHINE SAFETY EN FL HEATING ELECTR EN FL APPL_INVERTER EN FL_BASE_STATION_EN FL ELEVATOR EN FL POWER SUPPLY EN FL 72H SAMPLE SER EN PO OMNIMATE EN

PS 3.50/07/90 3.5SN BK BX

Weidmüller Interface GmbH & Co. KG
Klingenbergstraße 26
D-32758 Detmold
Germany

www.weidmueller.com

Drawings

Dimensional drawing

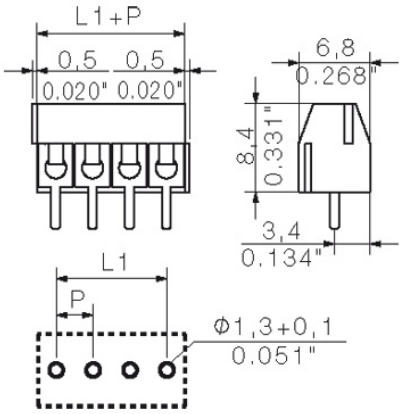

Graph

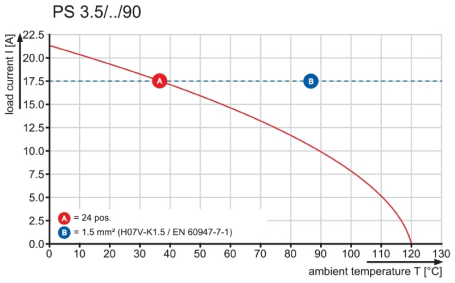

MASSE OHNE TOLERANZ SIND KEINE PRUEFMASSE
DIMS. WITHOUT TOLERANCE ARE NOT CONTROL DIMS.

DIE DEUTSCHE VERSION IST VERBINDLICH
THE GERMAN VERSION IS BINDING

06

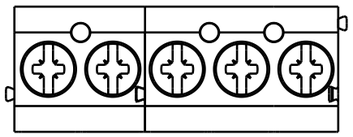

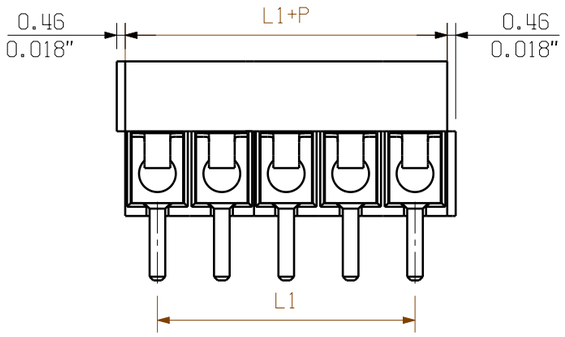

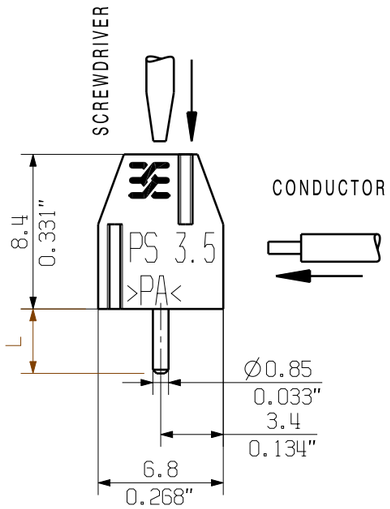

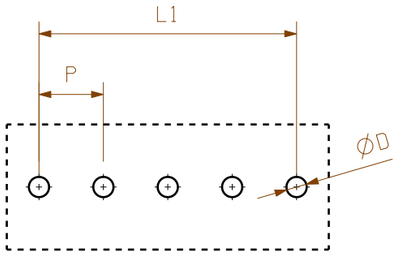

PCB LAYOUT

N	L1 [mm]	L1 [inch]
16	52.50	2.068
15	49.00	1.930
14	45.50	1.792
13	42.00	1.654
12	38.50	1.516
11	35.00	1.378
10	31.50	1.240
9	28.00	1.102
8	24.50	0.965
7	21.00	0.827
6	17.50	0.689
5	14.00	0.551
4	10.50	0.413
3	7.00	0.276
2	3.50	0.138

STIFTLÄNGE L PIN LENGTH L	TOLERANZ TOLERANCE
3.5	0.2
	-0.2

KUNDENZEICHNUNG
CUSTOMER DRAWING

For the mounting of PCBs, it should be noted that the rated data stated here relates only to the PCB components alone.
The neccessary creepage and clearance paths must be observed in connection with the respective applicant in accordance to IEC 664 / VDE 0110.
The current-carrying capacity and pitch tolerance is to be determined according to DIN IEC 326 part 3 very fine.

Weidmüller PCB components are tested to the DIN EN 61984 standard, and are valid for its field of application.
Provided that the components are used to the intended purpose, all requirements with respect to the occuring of electrical, mechanical, thermic and corrosive stress will be satisfied.

GENERAL TOLERANCE:
DIN ISO 2768-m

RoHS COMPLIANT

MAX. NRN./NOS.

85497/5
08.01.16 MA_J 01

MODIFICATION

	DATE	NAME
DRAWN	12.04.2005	HE_J
RESPONSIBLE		MA_J
CHECKED	08.01.2016	ZHOU_N
APPROVED		XU_S

SCALE: 3/1

SUPERSEDES: .

Weidmüller

CAT.NO.: .

C 41693 06
DRAWING NO. ISSUE NO.

SHEET 01 OF 01 SHEETS

PS 3.5/.../90 ...

LEITERPLATTENKLEMME
PCB TERMINAL

PRODUCT FILE: PS 3.5 7061

WEITERGABE SOWIE VERVIELFAELTIGUNG DIESES DOKUMENTS, VERWERTUNG UND MITTEILUNG SEINES INHALTS SIND VERBOTEN, SOWEIT NICHT AUSDRUECKLICH GESTATTET.
ZUWIDERHANDLUNGEN VERPFLICHTEN ZU SCHADENERSATZ. ALLE RECHTE FUER DEN FALL DER PATENT-, GEBRAUCHSMUSTER- ODER GESCHMACKSMUSTEREINTRAGUNG VORBEHALTEN.
THE REPRODUCTION, DISTRIBUTION AND UTILIZATION OF THIS DOCUMENT AS WELL AS THE COMMUNICATION OF ITS CONTENTS TO OTHERS WITHOUT EXPLICID AUTHORIZATION IS PROHIBITED.
OFFENDERS WILL BE HELD LIABLE FOR THE PAYMENT OF DAMAGES. WEIDMUELLER EXCLUSIVELY RESERVES THE RIGHT TO FILE FOR PATENTS, UTILITY MODELS OR DESIGNS.
© WEIDMUELLER INTERFACE GmbH & Co.KG

Recommended wave solderding profiles

Weidmüller Interface GmbH & Co. KG
Klingenbergstraße 16
D-32758 Detmold
Germany
Fon: +49 5231 14-0
Fax: +49 5231 14-292083
www.weidmueller.com

Single Wave:

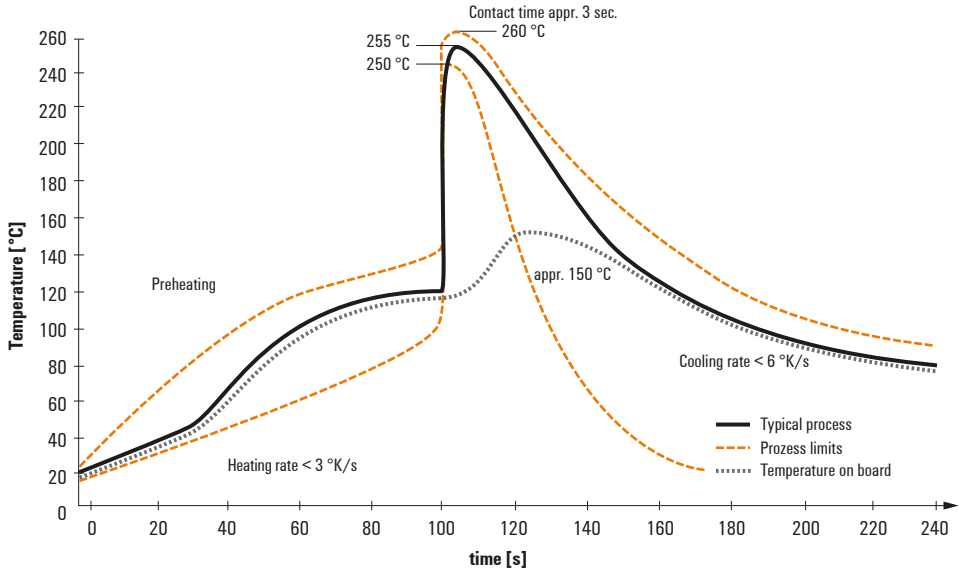

Double Wave:

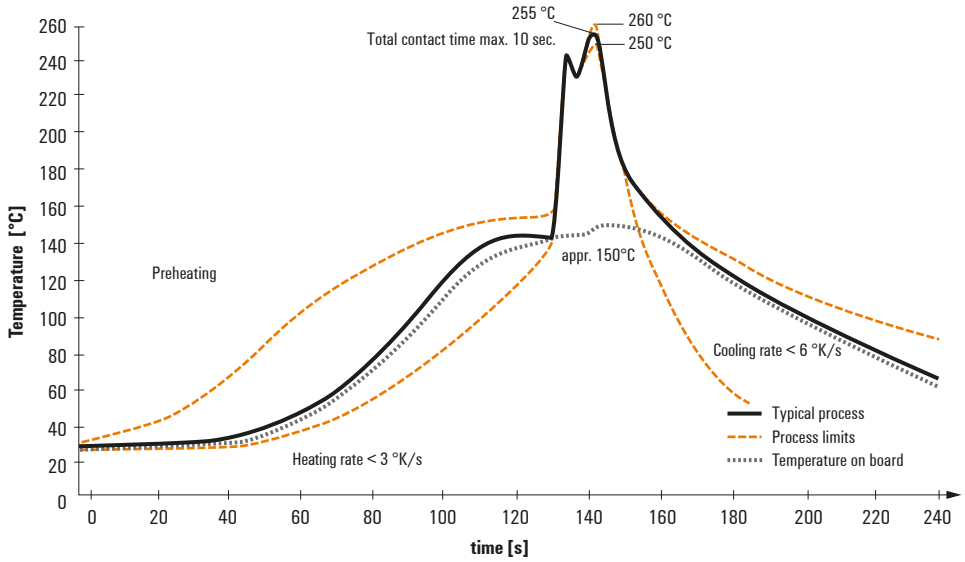

Wave soldering profiles

Wired connection elements should be processed in accordance with the DIN EN 61760-1 standard. We have included two recommendations for practical wave soldering profiles, with which Weidmüller PCB terminals and connectors are qualified.

When choosing a suitable profile for your application, the following factors also need to be considered:
- PCB thickness
- Proportion of Cu in the layers
- Single/double-sided assembly
- Product range
- Heating and cooling rates

The single and double wave profiles each indicate the recommended operating range, including the maximum soldering temperature of 260°C. In practice, the maximum soldering temperature is quite often well below the above maximum profile.

We reserve the right to make technical changes.