HEXFRED®
Ultrafast Soft Recovery Diode, 30 A

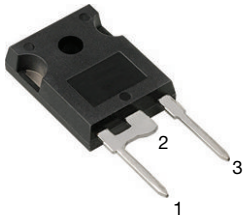

TO-247AC modified

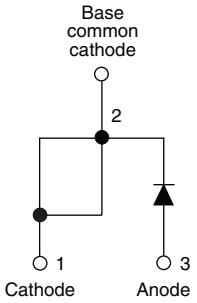

FEATURES

- Ultrafast and ultrasoft recovery
- Very low I_{RRM} and Q_{rr}
- AEC-Q101 qualified, meets JESD 201 class 1A whisker test
- Material categorization: for definitions of compliance please see www.vishay.com/doc?99912

AUTOMOTIVE GRADE

Pb-free

e3

RoHS COMPLIANT

HALOGEN FREE

BENEFITS

- Reduced RFI and EMI
- Reduced power loss in diode and switching transistor
- Higher frequency operation
- Reduced snubbing
- Reduced parts count

DESCRIPTION

VS-HFA30PB120... is a state of the art center tap ultrafast recovery diode. Employing the latest in epitaxial construction and advanced processing techniques it features a superb combination of characteristics which result in performance which is unsurpassed by any rectifier previously available. With basic ratings of 1200 V and 30 A continuous current, the VS-HFA30PB120... is especially well suited for use as the companion diode for IGBTs and MOSFETs. In addition to ultrafast recovery time, the HEXFRED® product line features extremely low values of peak recovery current (I_{RRM}) and does not exhibit any tendency to "snap-off" during the t_b portion of recovery. The HEXFRED features combine to offer designers a rectifier with lower noise and significantly lower switching losses in both the diode and the switching transistor. These HEXFRED advantages can help to significantly reduce snubbing, component count and heatsink sizes. The HEXFRED VS-HFA30PB120... is ideally suited for applications in power supplies and power conversion systems (such as inverters), motor drives, and many other similar applications where high speed, high efficiency is needed.

PRODUCT SUMMARY	
Package	TO-247AC modified (2 pins)
$I_{F(AV)}$	30 A
V_R	1200 V
V_F at I_F	2.3 V
t_{rr} typ.	47 ns
T_J max.	150 °C
Diode variation	Single die

ABSOLUTE MAXIMUM RATINGS				
PARAMETER	**SYMBOL**	**TEST CONDITIONS**	**VALUES**	**UNITS**
Cathode to anode voltage	V_R		1200	V
Maximum continuous forward current	I_F	T_C = 100 °C	30	A
Single pulse forward current	I_{FSM}		120	
Maximum repetitive forward current	I_{FRM}		90	
Maximum power dissipation	P_D	T_C = 25 °C	350	W
		T_C = 100 °C	140	
Operating junction and storage temperature range	T_J, T_{Stg}		-55 to +150	°C

For technical questions within your region: DiodesAmericas@vishay.com, DiodesAsia@vishay.com, DiodesEurope@vishay.com

THIS DOCUMENT IS SUBJECT TO CHANGE WITHOUT NOTICE. THE PRODUCTS DESCRIBED HEREIN AND THIS DOCUMENT ARE SUBJECT TO SPECIFIC DISCLAIMERS, SET FORTH AT www.vishay.com/doc?91000

ELECTRICAL SPECIFICATIONS (T_J = 25 °C unless otherwise specified)							
PARAMETER	**SYMBOL**	**TEST CONDITIONS**		**MIN.**	**TYP.**	**MAX.**	**UNITS**
Cathode to anode breakdown voltage	V_{BR}	I_R = 100 µA		1200	-	-	V
Maximum forward voltage	V_{FM}	I_F = 30 A	See fig. 1	-	2.4	4.1	
		I_F = 60 A		-	3.1	5.7	
		I_F = 30 A, T_J = 125 °C		-	2.3	4.0	
Maximum reverse leakage current	I_{RM}	V_R = V_R rated	See fig. 2	-	1.3	40	µA
		T_J = 125 °C, V_R = 0.8 x V_R rated		-	1100	4000	
Junction capacitance	C_T	V_R = 200 V	See fig. 3	-	50	75	pF
Series inductance	L_S	Measured lead to lead 5 mm from package body		-	8.0	-	nH

DYNAMIC RECOVERY CHARACTERISTICS (T_J = 25 °C unless otherwise specified)							
PARAMETER	**SYMBOL**	**TEST CONDITIONS**		**MIN.**	**TYP.**	**MAX.**	**UNITS**
Reverse recovery time See fig. 5, 10	t_{rr}	I_F = 1.0 A, dI_F/dt = 200 A/µs, V_R = 30 V		-	47	-	ns
	t_{rr1}	T_J = 25 °C	I_F = 30 A dI_F/dt = 200 A/µs V_R = 200 V	-	110	170	
	t_{rr2}	T_J = 125 °C		-	170	260	
Peak recovery current See fig. 6	I_{RRM1}	T_J = 25 °C		-	10	15	A
	I_{RRM2}	T_J = 125 °C		-	16	24	
Reverse recovery charge See fig. 7	Q_{rr1}	T_J = 25 °C		-	650	980	nC
	Q_{rr2}	T_J = 125 °C		-	1540	2310	
Peak rate of fall of recovery current during t_b See fig. 8	$dI_{(rec)M}/dt1$	T_J = 25 °C		-	270	-	A/µs
	$dI_{(rec)M}/dt2$	T_J = 125 °C		-	240	-	

THERMAL - MECHANICAL SPECIFICATIONS						
PARAMETER	**SYMBOL**	**TEST CONDITIONS**	**MIN.**	**TYP.**	**MAX.**	**UNITS**
Lead temperature	T_{lead}	0.063" from case (1.6 mm) for 10 s	-	-	300	°C
Thermal resistance, junction to case	R_{thJC}		-	-	0.36	°C/W
Thermal resistance, junction to ambient	R_{thJA}	Typical socket mount	-	-	80	
Thermal resistance, case to heatsink	R_{thCS}	Mounting surface, flat, smooth and greased	-	0.50	-	
Weight			-	5.61	-	g
			-	0.198	-	oz.
Mounting torque			6.0 (5.0)	-	12 (10)	kgf · cm (lbf · in)
Marking device		Case style TO-247AC modified (JEDEC)	HFA30PB120H			

For technical questions within your region: DiodesAmericas@vishay.com, DiodesAsia@vishay.com, DiodesEurope@vishay.com
THIS DOCUMENT IS SUBJECT TO CHANGE WITHOUT NOTICE. THE PRODUCTS DESCRIBED HEREIN AND THIS DOCUMENT ARE SUBJECT TO SPECIFIC DISCLAIMERS, SET FORTH AT www.vishay.com/doc?91000

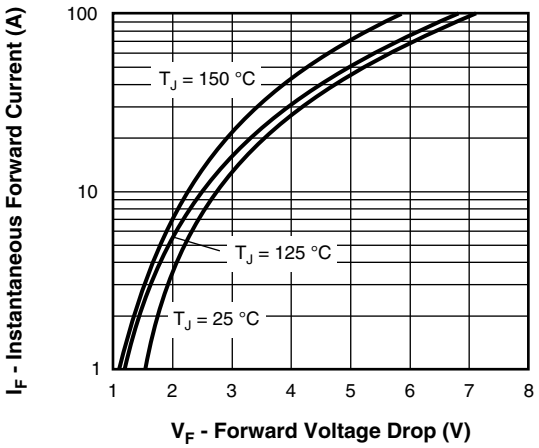

Fig. 1 - Maximum Forward Voltage Drop vs. Instantaneous Forward Current

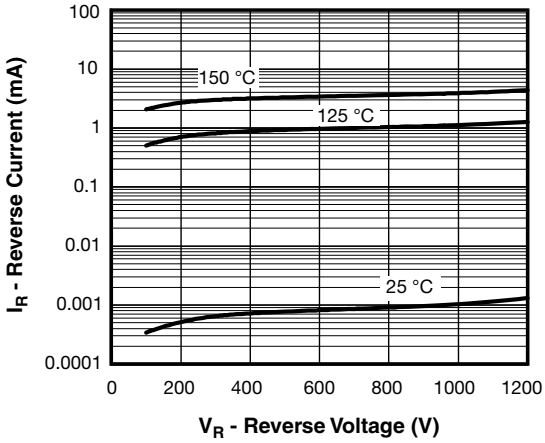

Fig. 2 - Typical Reverse Current vs. Reverse Voltage

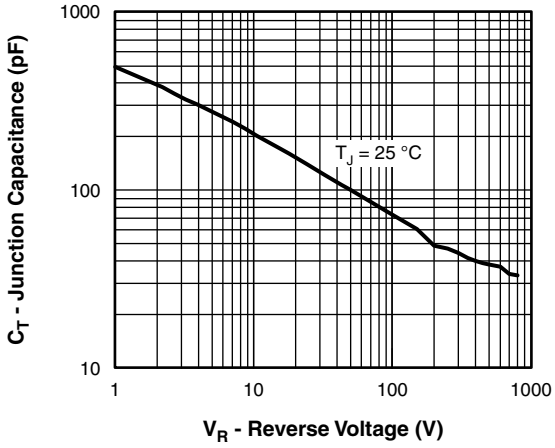

Fig. 3 - Typical Junction Capacitance vs. Reverse Voltage

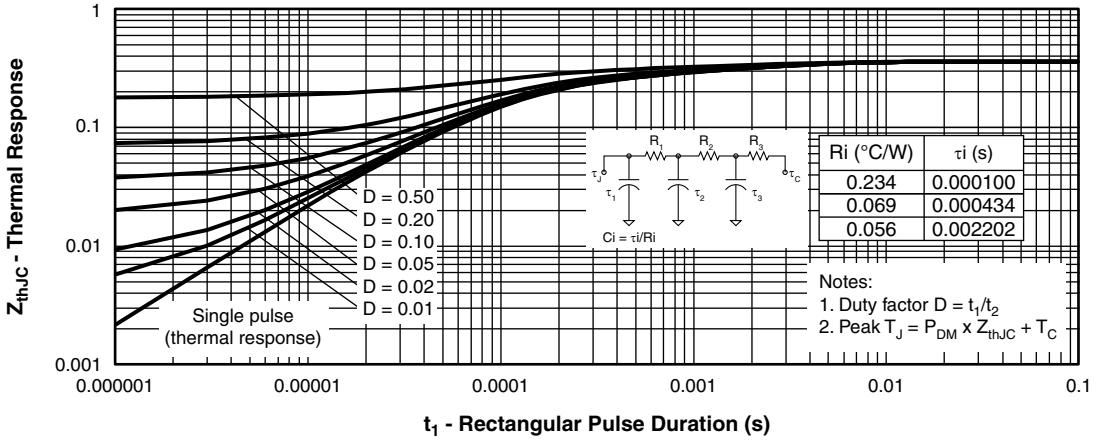

Fig. 4 - Maximum Thermal Impedance Z_{thJC} Characteristics

For technical questions within your region: DiodesAmericas@vishay.com, DiodesAsia@vishay.com, DiodesEurope@vishay.com
THIS DOCUMENT IS SUBJECT TO CHANGE WITHOUT NOTICE. THE PRODUCTS DESCRIBED HEREIN AND THIS DOCUMENT ARE SUBJECT TO SPECIFIC DISCLAIMERS, SET FORTH AT www.vishay.com/doc?91000

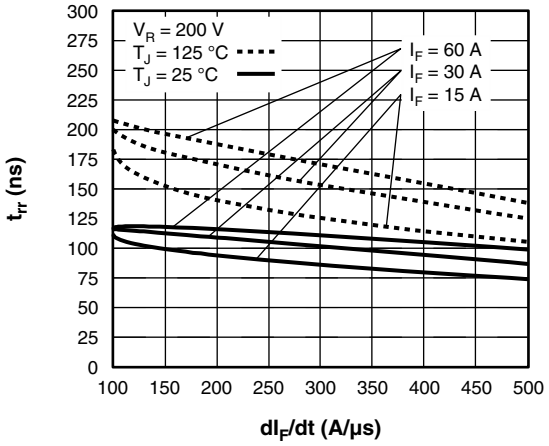

Fig. 5 - Typical Reverse Recovery Time vs. dI_F/dt (Per Leg)

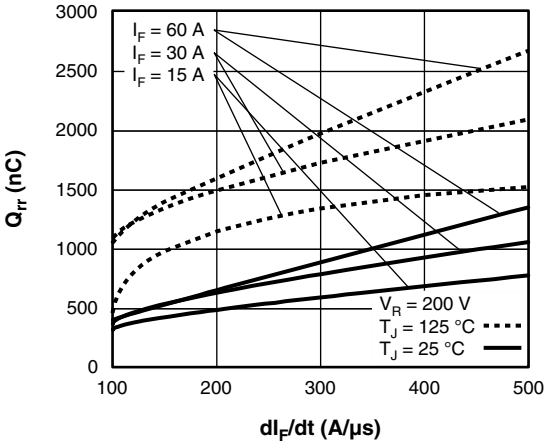

Fig. 7 - Typical Stored Charge vs. dI_F/dt (Per Leg)

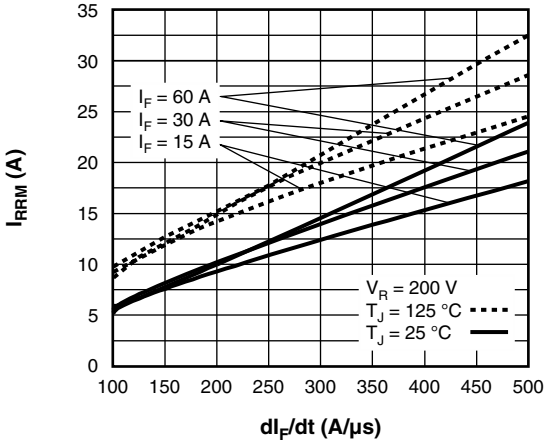

Fig. 6 - Typical Recovery Current vs. dI_F/dt (Per Leg)

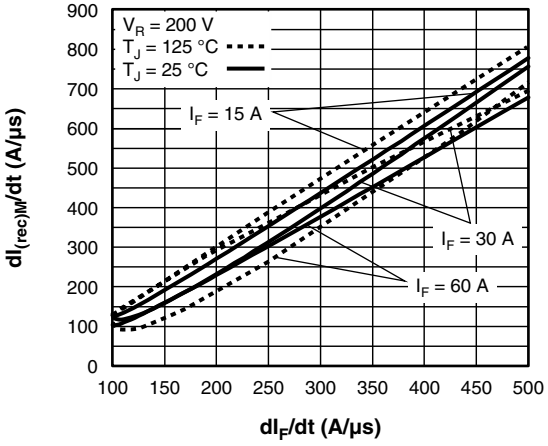

Fig. 8 - Typical $dI_{(rec)M}/dt$ vs. dI_F/dt(Per Leg)

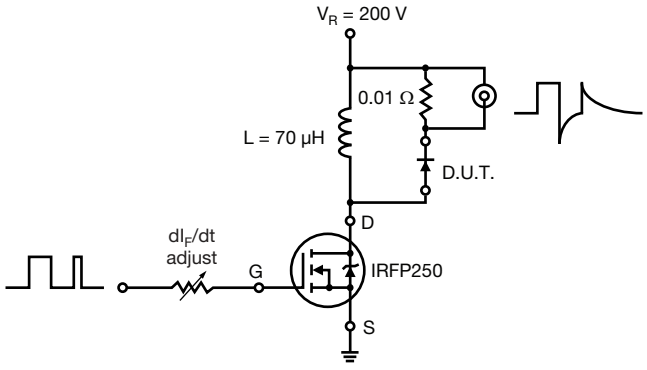

Fig. 9 - Reverse Recovery Parameter Test Circuit

For technical questions within your region: DiodesAmericas@vishay.com, DiodesAsia@vishay.com, DiodesEurope@vishay.com
THIS DOCUMENT IS SUBJECT TO CHANGE WITHOUT NOTICE. THE PRODUCTS DESCRIBED HEREIN AND THIS DOCUMENT ARE SUBJECT TO SPECIFIC DISCLAIMERS, SET FORTH AT www.vishay.com/doc?91000

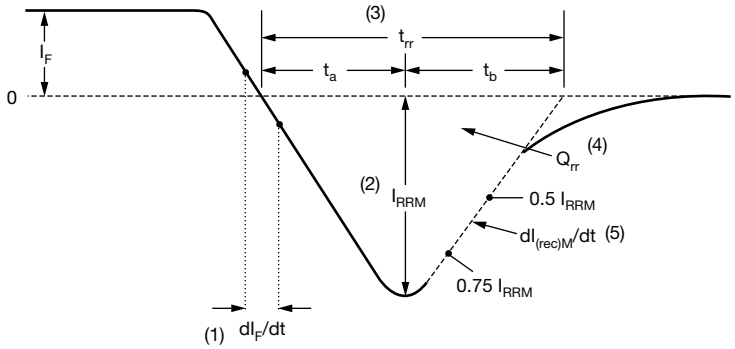

(1) dI_F/dt - rate of change of current through zero crossing

(2) I_{RRM} - peak reverse recovery current

(3) t_{rr} - reverse recovery time measured from zero crossing point of negative going I_F to point where a line passing through 0.75 I_{RRM} and 0.50 I_{RRM} extrapolated to zero current.

(4) Q_{rr} - area under curve defined by t_{rr} and I_{RRM}

$$Q_{rr} = \frac{t_{rr} \times I_{RRM}}{2}$$

(5) $dI_{(rec)M}/dt$ - peak rate of change of current during t_b portion of t_{rr}

Fig. 10 - Reverse Recovery Waveform and Definitions

ORDERING INFORMATION TABLE

Device code

VS-	HF	A	30	PB	120	H	N3
1	2	3	4	5	6	7	8

- 1 - Vishay Semiconductors product
- 2 - HEXFRED® family
- 3 - Electron irradiated
- 4 - Current rating (30 = 30 A)
- 5 - PB = TO-247AC modified
- 6 - Voltage rating: (120 = 1200 V)
- 7 - H = AEC-Q101 qualified
- 8 - Environmental digit:

  -N3 = halogen-free, RoHS-compliant, and totally lead (Pb)-free

ORDERING INFORMATION (Example)			
PREFERRED P/N	**QUANTITY PER T/R**	**MINIMUM ORDER QUANTITY**	**PACKAGING DESCRIPTION**
VS-HFA30PB120HN3	25	500	Antistatic plastic tube

LINKS TO RELATED DOCUMENTS	
Dimensions	www.vishay.com/doc?95253
Part marking information	www.vishay.com/doc?95442
SPICE model	www.vishay.com/doc?95358

For technical questions within your region: DiodesAmericas@vishay.com, DiodesAsia@vishay.com, DiodesEurope@vishay.com
THIS DOCUMENT IS SUBJECT TO CHANGE WITHOUT NOTICE. THE PRODUCTS DESCRIBED HEREIN AND THIS DOCUMENT ARE SUBJECT TO SPECIFIC DISCLAIMERS, SET FORTH AT www.vishay.com/doc?91000

TO-247AC modified

DIMENSIONS in millimeters and inches

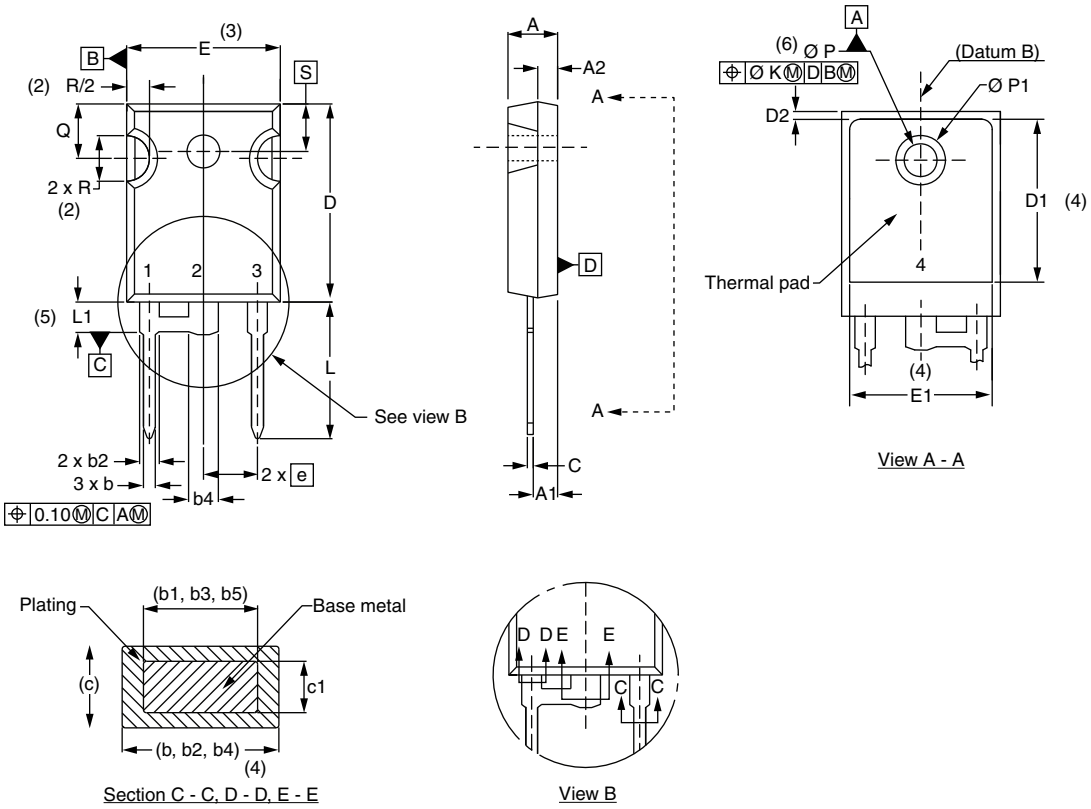

SYMBOL	MILLIMETERS		INCHES		NOTES
	MIN.	MAX.	MIN.	MAX.	
A	4.65	5.31	0.183	0.209	
A1	2.21	2.59	0.087	0.102	
A2	1.50	2.49	0.059	0.098	
b	0.99	1.40	0.039	0.055	
b1	0.99	1.35	0.039	0.053	
b2	1.65	2.39	0.065	0.094	
b3	1.65	2.34	0.065	0.092	
b4	2.59	3.43	0.102	0.135	
b5	2.59	3.38	0.102	0.133	
c	0.38	0.89	0.015	0.035	
c1	0.38	0.84	0.015	0.033	
D	19.71	20.70	0.776	0.815	3
D1	13.08	-	0.515	-	4

SYMBOL	MILLIMETERS		INCHES		NOTES
	MIN.	MAX.	MIN.	MAX.	
D2	0.51	1.30	0.020	0.051	
E	15.29	15.87	0.602	0.625	3
E1	13.46	-	0.530	-	
e	5.46 BSC		0.215 BSC		
Ø K	0.254		0.010		
L	14.20	16.10	0.559	0.634	
L1	3.71	4.29	0.146	0.169	
Ø P	3.56	3.66	0.14	0.144	
Ø P1	-	6.98	-	0.275	
Q	5.31	5.69	0.209	0.224	
R	4.52	5.49	0.178	0.216	
S	5.51 BSC		0.217 BSC		

Notes

(1) Dimensioning and tolerance per ASME Y14.5M-1994

(2) Contour of slot optional

(3) Dimension D and E do not include mold flash. Mold flash shall not exceed 0.127 mm (0.005") per side. These dimensions are measured at the outermost extremes of the plastic body

(4) Thermal pad contour optional with dimensions D1 and E1

(5) Lead finish uncontrolled in L1

(6) Ø P to have a maximum draft angle of 1.5 to the top of the part with a maximum hole diameter of 3.91 mm (0.154")

(7) Outline conforms to JEDEC® outline TO-247 with exception of dimension c

For technical questions within your region: DiodesAmericas@vishay.com, DiodesAsia@vishay.com, DiodesEurope@vishay.com

THIS DOCUMENT IS SUBJECT TO CHANGE WITHOUT NOTICE. THE PRODUCTS DESCRIBED HEREIN AND THIS DOCUMENT ARE SUBJECT TO SPECIFIC DISCLAIMERS, SET FORTH AT www.vishay.com/doc?91000

Disclaimer

ALL PRODUCT, PRODUCT SPECIFICATIONS AND DATA ARE SUBJECT TO CHANGE WITHOUT NOTICE TO IMPROVE RELIABILITY, FUNCTION OR DESIGN OR OTHERWISE.

Vishay Intertechnology, Inc., its affiliates, agents, and employees, and all persons acting on its or their behalf (collectively, “Vishay”), disclaim any and all liability for any errors, inaccuracies or incompleteness contained in any datasheet or in any other disclosure relating to any product.

Vishay makes no warranty, representation or guarantee regarding the suitability of the products for any particular purpose or the continuing production of any product. To the maximum extent permitted by applicable law, Vishay disclaims (i) any and all liability arising out of the application or use of any product, (ii) any and all liability, including without limitation special, consequential or incidental damages, and (iii) any and all implied warranties, including warranties of fitness for particular purpose, non-infringement and merchantability.

Statements regarding the suitability of products for certain types of applications are based on Vishay's knowledge of typical requirements that are often placed on Vishay products in generic applications. Such statements are not binding statements about the suitability of products for a particular application. It is the customer's responsibility to validate that a particular product with the properties described in the product specification is suitable for use in a particular application. Parameters provided in datasheets and / or specifications may vary in different applications and performance may vary over time. All operating parameters, including typical parameters, must be validated for each customer application by the customer's technical experts. Product specifications do not expand or otherwise modify Vishay's terms and conditions of purchase, including but not limited to the warranty expressed therein.

Hyperlinks included in this datasheet may direct users to third-party websites. These links are provided as a convenience and for informational purposes only. Inclusion of these hyperlinks does not constitute an endorsement or an approval by Vishay of any of the products, services or opinions of the corporation, organization or individual associated with the third-party website. Vishay disclaims any and all liability and bears no responsibility for the accuracy, legality or content of the third-party website or for that of subsequent links.

Except as expressly indicated in writing, Vishay products are not designed for use in medical, life-saving, or life-sustaining applications or for any other application in which the failure of the Vishay product could result in personal injury or death. Customers using or selling Vishay products not expressly indicated for use in such applications do so at their own risk. Please contact authorized Vishay personnel to obtain written terms and conditions regarding products designed for such applications.

No license, express or implied, by estoppel or otherwise, to any intellectual property rights is granted by this document or by any conduct of Vishay. Product names and markings noted herein may be trademarks of their respective owners.

© 2023 VISHAY INTERTECHNOLOGY, INC. ALL RIGHTS RESERVED