REVISIONS					
REV.	ECN NO.	LOCATION	DESCRIPTION	DATE	DESIGN
A0	N/A		INITIAL RELEASE	/	/
A1	N/A		图面升级整理图面	2025.05.26	阿树

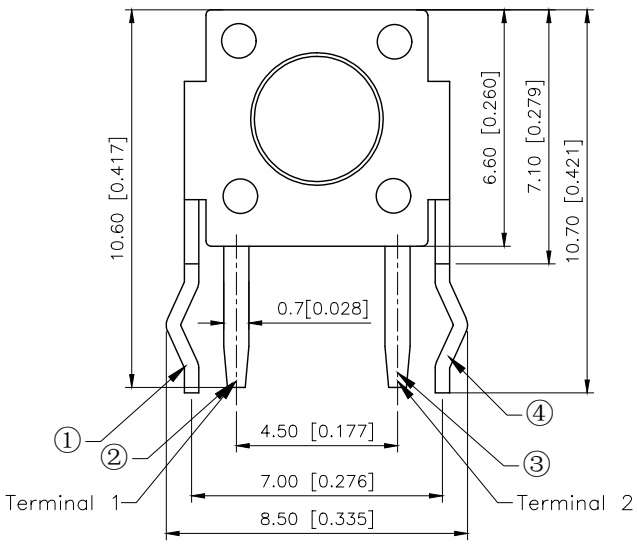

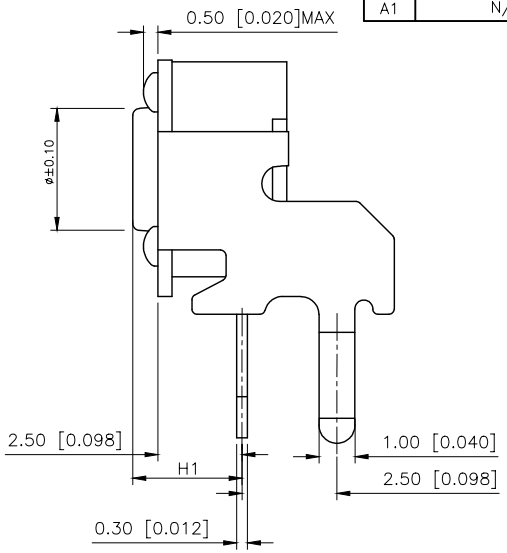

Code-x	H(mm)	H1(mm)	ø(mm)
A	4.30	3.15	3.50
B	4.50	3.35	
C	5.00	3.85	
D	5.50	4.35	
E	6.00	4.85	
F	6.50	5.35	3.40
G	7.00	5.85	
H	7.50	6.35	3.30
I	8.00	6.85	
J	8.50	7.35	
K	9.00	7.85	3.10
L	9.50	8.35	
M	10.00	8.85	
N	10.50	9.35	3.00

Code-x	H(mm)	H1(mm)	ø(mm)
O	11.00	9.85	3.00
P	11.50	10.35	
Q	12.00	10.85	
R	12.50	11.35	
S	13.00	11.85	
T	13.50	12.35	
U	14.00	12.85	
V	15.00	13.35	
W	15.50	14.35	
X	16.00	14.85	
Y	17.00	15.85	
Z	18.00	16.35	
19	19.00	17.85	

SPECIFICATION
Contact Rating: 50mA,12V DC
Contact Resistance: 100mΩ max
Insulation Resistance: 100MΩ min.500V DC
Dielectric Strength: 250V AC/1minute
Travel: 0.25mm
Operating Temp: -40℃~+85℃
Storage Temp: -40℃~+85℃

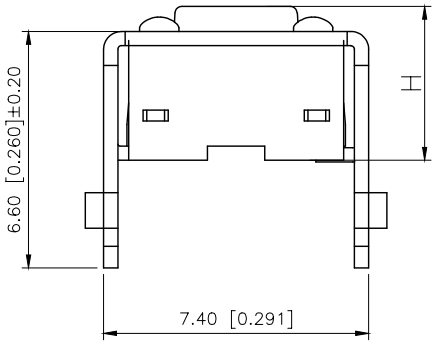

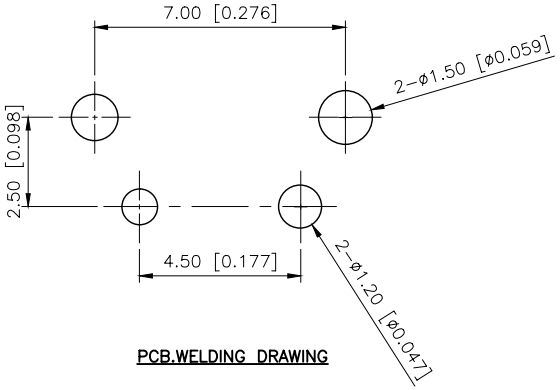

PCB.WELDING DRAWING

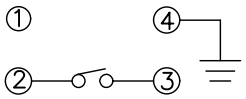

CIRCUIT DIAGRAM

PAPT NO	TC-1102HJ-B-C
Operating Force	A:100gf B:160gf C:260gf
Height	Code-X

ITEM	PAPT NAMF	QTY	MATERIAL	FINISHING
⑤	Terminal	2	Brass（0.30t）	Plating silvering
④	Contact	1	F.ag/SUS	Natural
③	Base	1	PA46	
②	Cover	1	Spcc	Plating Nickel
①	Keystake	1	PA46	

AuGLAR	±5°
X.	±0.40
X.x	±0.30
X.xx	±0.20
X.xxx	±0.15
UNSPECIFIED TOLERAuCES	

XKB Connection 星坤

DESIGN	阿树	VIEW:	MODEL TYPE: TACT SWITCH
CHECKED		UNIT: mm/in	PART NO.: TC-1102HJ-B-C
APPROVED		SIZE: A4	DWG NO.: TC-1102HJ-B-C

XKB INDUSTRIAL PRECISION CO.,LIMITED

SCALE	PAGE	REVISION
N/A	1/1	A1