Datasheet

Gas Discharge Tube (GDT)

Series / Models	SMD5542 (2000~4000V)
Product Code	10.12.25.XXXX
Version	A1
Date	2025-03-11
File Number	SP-GDT-169

Copyright ©2024-2025 Shenzhen Ruilongyuan Electronics Co., Ltd. All Rights Reserved. Unless authorized by Shenzhen Ruilongyuan Electronics Co., Ltd, no institution or individual may copy, publish or disseminate all or part of the contents of this datasheet.

Version History

Version	Date	Page	Description	Author
A0	2024-02-22	/	Initial draft	Xia Wu
A1	2025-03-11	Page1,2,5	1. Add cover and version history 2. Add certifications table	Xia Wu

Description

Gas discharge tubes (GDTs) are generally in a high insulation resistance state, equivalent to an open circuit, which has almost no impact on the normal operation of the circuit. When transient overvoltage occurs in the circuit and the voltage amplitude exceeds the breakdown voltage of the GDT, the gas inside the GDT is ionized, causing the GDT to quickly conduct and limit the overvoltage to a lower level, thereby protecting electronic devices or circuit components connected in parallel from high voltage impact damage. After the overvoltage disappears, the GDT immediately returns to a high insulation resistance state, and the circuit resumes normal operation.

The SMD5542 series GDT is a high-voltage surface mount package. It is not only small in size and easy to install on various compact printed circuit boards (PCBs), but also has excellent performance. High AC withstand voltage and high insulation resistance ensure that the performance of the circuit will not suffer additional losses under normal operating conditions. The SMD5542 series GDT is a high-voltage (2000-4000V) component designed specifically for surge protection and high isolation applications. It is also suitable for applications where there is typically a bias voltage or signal level of several hundred volts. It can also be combined with MOVs to provide excellent protection performance for AC applications.

Electrical symbol

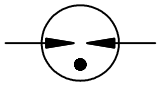

Features

- Voltage Ranges 2000V to 4000V
- Excellent response to fast rising transients
- 8/20μs Impulse current capability: 3KA
- Non-Radioactive
- Ultra Low capacitance (<0.5pF)
- Size: 5.5mm*4.2mm*4.2mm

Applications

Automotive:

- On-board chargers
- Vehicle charging stations

Others:

- LED lighting
- Power supply
- Photovoltaic
- Air conditioning

Part Number Code

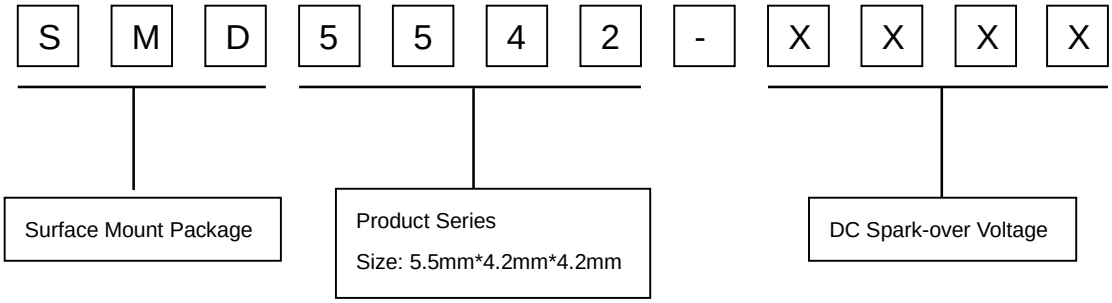

Electrical Characteristics

Part Number	DC Spark-over Voltage [1) 2)] @100V/S	Impulse Spark-over Voltage		Insulation Resistance [3)]	Capacitance @1MHz	Glow Voltage @10mA	Arc Voltage @1A	AC withstand voltage @5mA 1Min	Life Ratings			
		100V/μS	1KV/μS						Impulse Discharge Current @8/20μS		Impulse Discharge Current @1.2/50μS 12Ω [4)]	Alternating Discharge Current @50Hz 1S
		Max	Max	Min	Max	Typical	Typical		±5 times	1 time	±40 times	10 times
	V	V	V	GΩ	pF	V	V	V	KA	KA	KV	A
SMD5542-2000	2000±20%	2800	3000	1	0.5	260	25	1000	3	5	10	1
SMD5542-2500	2500±20%	3300	3500	1	0.5	260	25	1300	3	5	10	1
SMD5542-3000	3000±20%	4300	4500	1	0.5	260	30	1600	3	5	10	1
SMD5542-3600	3600±20%	4800	5000	1	0.5	260	30	1900	3	5	10	1
SMD5542-4000	4000±20%	5800	6000	1	0.5	260	35	2100	3	5	10	1

Glow to Arc transition Current…….....	~0.3A
Weight…….....	~0.3g
Operation temperature……..	-40~+125°C
Recommended storage [5)]	
- Temperature ……..	+5~+35°C
- Humidity ……..	45~80%
- Period……..	≤ 2 years
Climatic category (IEC 60068-1)……..	40/125/21
Marking……	Without
Surface treatment…….....	Matte-tin plated
Moisture sensitivity level [6)] ……	1

1) At delivery AQL 0.65 level II, DIN ISO 2859.
2) In ionized mode.
3) Insulation Resistance Measuring Voltage at DC 500V.
4) Tested at AC220V with varistor.
5) Specified in terms of corrosion against tin plating.
6) Tests according to JEDEC J-STD-020.
Terms in accordance with ITU-T Rec. K.12, IEC 61643-311, GB/T 18802.311.

Certifications table

Part Number	c UL us UL1449 E508408
SMD5542-2000	◎
SMD5542-2500	◎
SMD5542-3000	◎
SMD5542-3600	◎
SMD5542-4000	--

Notes:

1. ◎ indicates that the product has passed the certification.
2. -- indicates that the product is not certified.

Dimensions

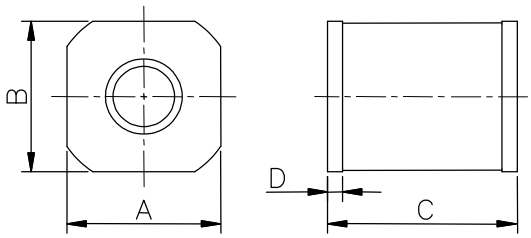

Symbol	Millimeters	Inches
A	4.2±0.2	0.165±0.008
B	4.2±0.2	0.165±0.008
C	5.5±0.3	0.217±0.012
D	0.4±0.1	0.016±0.004
X	1.1	0.043
X1	5	0.197
Y	4.5	0.177

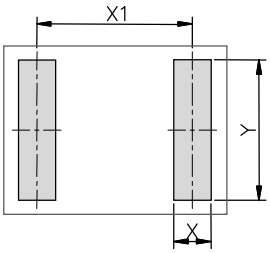

Recommended Soldering Pad Layout

Packaging Information

Tape Specifications

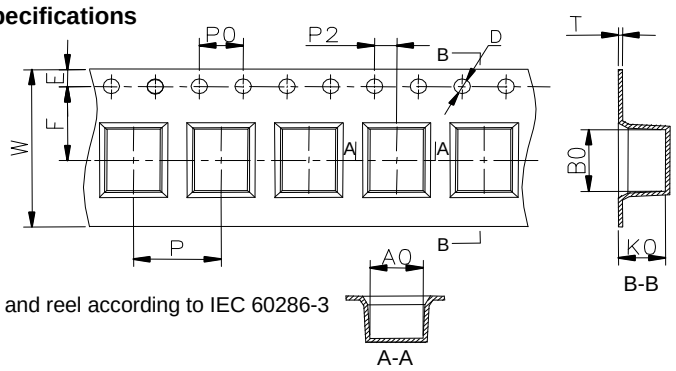

Tape and reel according to IEC 60286-3

Symbol	Millimeters	Inches
W	16±0.3	0.630±0.012
A0	4.6+0.2/-0.1	0.181+0.008/-0.004
B0	5.85+0.3/-0.1	0.230+0.012/-0.004
K0	4.6±0.1	0.181±0.004
P	8.0±0.1	0.315±0.004
F	7.5±0.1	0.295±0.004
E	1.75±0.1	0.069±0.004
D	1.5+0.1/-0.0	0.059+0.004/-0.0
P0	4±0.1	0.157±0.004
P2	2±0.1	0.079±0.004
T	0.35±0.05	0.014±0.002
D0	13.3±0.15	0.524±0.006
D1	330±2	12.992±0.079
D2	100+1/-2	3.937+0.039/-0.079
W1	16.5±0.4	0.65±0.016

Reel Specifications

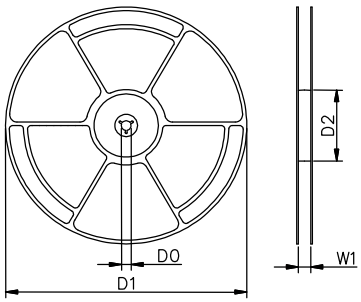

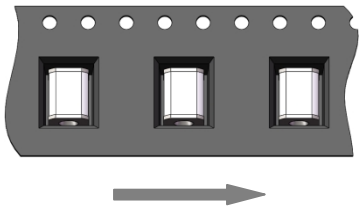

Direction of Unreeling

	Reel	Inner Box	Carton
Size	330×17mm	340×333×70mm	375×353×380mm
Quantity	MPQ/MOQ: 1 reel=1,500pcs	1 Inner Box=3 reels=4,500pcs	1Carton=5 Inner boxes=22,500pcs
Photos	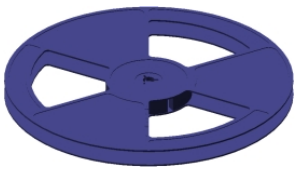	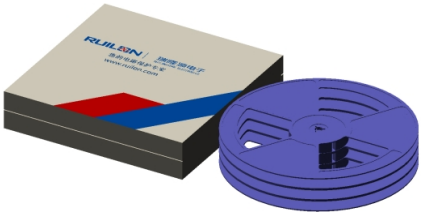	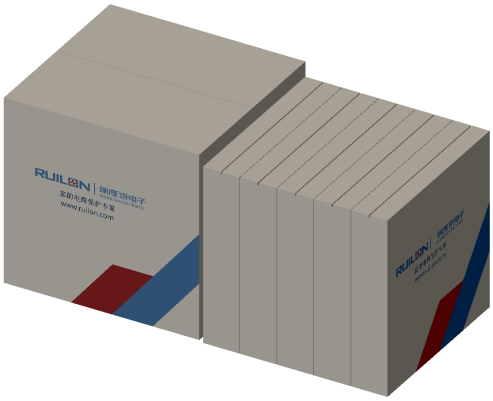

Soldering Parameters - Reflow Soldering (Surface Mount Devices)

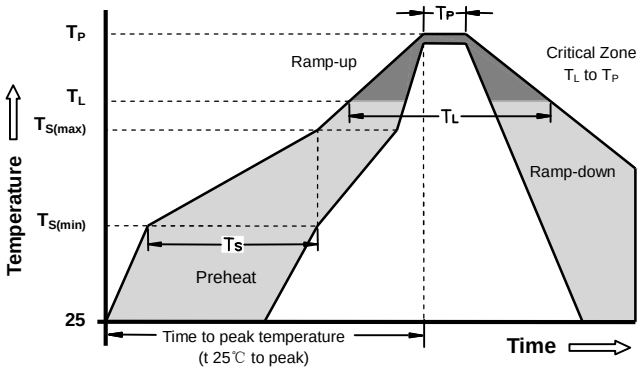

Reflow Condition		Pb - Free assembly
Preheat	-Temperature Min ($T_{s(min)}$)	150°C
	-Temperature Max ($T_{s(max)}$)	200°C
	- Time (min to max) (t_s)	60 -180 Seconds
Average ramp up rate (Liquids Temp T_L) to peak		3°C/second max
$T_{S(max)}$ to TL - Ramp-up Rate		5°C/second max
Reflow	- Temperature (T_L) (Liquids)	217°C
	- Time (min to max) (t_s)	60 -150 Seconds
Peak Temperature (T_P)		260 +0/-5°C
Time within 5°C of actual peak Temperature (t_p)		10 - 30 Seconds
Ramp-down Rate		6°C/second max
Time 25°C to peak Temperature (T_P)		8 minutes Max
Do not exceed		260°C

Terms and definitions

NO.	Item	Definitions
1	Gas discharge tube(GDT)	A gap, or several gaps, in an enclosed discharge medium, other than air at atmospheric pressure, designed to protect apparatus or personnel, or both, from high transient voltages. Also referred to as "gas tube surge arrester".
2	DC Spark-over Voltage	The voltage at which the gas discharge tube sparks over with slowly increasing d.c. voltage.
3	Impulse Spark-over Voltage	The highest voltage which appears across the terminals of a gas discharge tube in the period between the application of an impulse of given wave-shape and the time when current begins to flow.
5	Arc voltage	Voltage drop across the GDT during arc current flow.
6	Glow voltage	Peak value of voltage drop across the GDT when a glow current is flowing.
7	Impulse discharge current 8/20μs	Current impulse with a nominal virtual front time of 8 μs and a nominal time to half-value of 20 μs.
8	Alternating Discharge Current	The rms value of an approximately sinusoidal alternating current passing through the gas discharge tube.
9	Insulation Resistance	Insulation resistance shall be measured from each terminal to every other terminal of the GDT. The test is performed with DC50V when normal spark-over Voltage 70~150V, others with DC100V.
10	Capacitance	The capacitance shall be measured once at 1 MHz between all terminals unless otherwise specified.

Cautions

- Do not operate gas discharge tubes in power supply networks, whose maximum operating voltage exceeds the minimum spark-over voltage of the gas discharge tubes.

- Gas discharge tubes may become hot in the event of longer periods of current stress (burn risk). In the event of overload the connectors may fail or the component may be destroyed.

- Gas discharge tubes must be handled with care and must not be dropped.

- Do not continue to use damaged gas discharge tubes.

- The shown SMD pad dimensions represent a safe way to mount the arrester and are a recommendation of the manufacturer. During the reflow process it must be assured that no solder material reduces the insulation distance between the pads below the arrester.

- SMD gas discharge tubes should be soldered within 24 month after shipment.

- The electrical characteristics described in this datasheet are only typical characteristics, and all of these characteristics have been confirmed through testing and inspection. If the customer's usage requirements are different from this or have special requirements, please contact Ruilongyuan Electronics Co., Ltd. If protection failure or circuit damage occurs as a result, our company is not responsible for it.

- Ruilongyuan Electronics Co., Ltd. always strives to improve our products. Consequently, the products described in this datasheet may be updated from time to time, and the corresponding product specifications may also be updated accordingly. So, before or at the time of placing your order, please check to what extent the product descriptions and specifications contained in this publication are still applicable. Ruilongyuan Electronics Co., Ltd. still reserves the right to cease production and delivery of products. Consequently, we cannot guarantee that all products listed in this datasheet will always be available. The above provisions do not apply to individual agreements with customers for specific products.

- Ruilongyuan Electronics Co., Ltd. models may have different product codes. Different product code representations are due to the use of different production processes, but do not affect their respective product specifications.