DATASHEET

AS77 SERIES

AIoTSensing

AIoTSensing Inc.
Website: http://www.aiotsensing.com

History of Revision

Datasheet Rev.	Date	Note
01	Sep/22/2021	Released
02	Mar/17/2023	Added the type of the mv output sensor

AIoTSensing

CONTENTS

1.Features……4
2.Applications……4
3.Descriptions……4
4. Standard Pressure Ranges……5
5. Performance Characteristics ……5
6. Block Diagram……6
7.1 Electrical Specifications……6
7.2 Absolute Maximum Rating……7
8. Function Descriptions……7
8.1 General Description……7
8.2 Factory Calibration……7
8.3 Sensor Output Conversion……7
9. Registers……8
9.1. Normal Registers……8
9.2 OTP Registers……9
10. High-Speed I²C Digital Output Interface……9
10.1 I²C Specification……9
10.2 I²C Device Address……10
10.3 I²C Protocol……11
11. SPI Interface……13
12. Application Circuit……15
13. Package Outline ……16
14.Recommended Pad Layout……18
15.Packing Options……18
16. How to Order……18
17. Soldering Recommendation……19
18. Sensor Reading……20
19. Legal Disclaimer……21

AIoTsensing

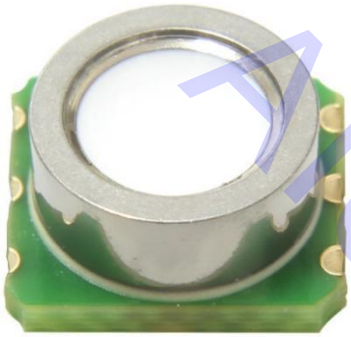

1. Features

- Pressure ranges from 0 to20Bar
- Gage or Absolute pressure type
- 24-bit digital, pressure calibrated and temperature compensated output
- I2C interface & SPI interface
- 1.8V to 5.5V power supply
- Low power consumption
- Package size is 6.8mm x 6.2mm x3.2mm
- Package size is 6.8mm x 6.2mm x3.3mm
- Package size is 6.8mm x 6.2mm x3.7mm
- Package size is 6.8mm x 6.2mm x7.6mm
-

2. Applications

- Medical Breathing
- Industrial Controls
- HVAC
- Environmental Controls
- Portable Equipment
- Liquefied Petroleum Gas (LPG)Pressure Measurement（Optional）
- Compressed Nature Gas (CNG)Pressure Measurement （Optional）

3. Descriptions

The AS77 series are high precision MEMS sensor family offers state-of-the-art pressure transducer technology to produce a digital output, fully conditioned, multi-order pressure and temperature compensated outputs. This series provides JEDEC standard Package is surface mount with a stainless-steel cap and is RoHS compliant.

Combining the pressure sensor with a signal-conditioning ASIC in a single package simplifies the use of advanced silicon micro-machined pressure sensors. The pressure sensor can be mounted directly on a standard printed circuit board, calibrated pressure signal can be acquired from the digital interface. This eliminates the need for additional circuitry, such as a compensation network or microcontroller containing a custom correction algorithm.

AIoT Sensing

4. Standard Pressure Ranges

Absolute Pressure Type Products			
Device	**Operating Range**	**Proof Pressure**	**Burst Pressure**
AS77/S-01BA	0~1BA	2XFSS	3XFSS
AS77/S-02BA	0~2BA	2XFSS	3XFSS
AS77/S-05BA	0~5BA	2XFSS	3XFSS
AS77/S-10BA	0~10BA	2XFSS	3XFSS
AS77/S-14BA	0~14BA	2XFSS	3XFSS
AS77/S-20BA	0~20BA	2XFSS	3XFSS
Gage Pressure Type Products			
Device	**Operating Range**	**Proof Pressure**	**Burst Pressure**
AS77H/P-050KG	0~50kPa	200 kPa	300kPa
AS77H/P-100KG	0~100kPa	200 kPa	300kPa
AS77H/P-400KG	0~400kPa	800 kPa	1200kPa
AS77H/P-800KG	0~800kPa	2000 kPa	3000kPa

5. Performance Characteristics

5.1 Pressure

Parameter	Min	Typ	Max	Units	Specification Notes
Pressure Accuracy			±0.25	%FSS	@25°C Absolute
		±0.5		%FSS	@25°C Gage
Total error band		±1.0		%FSS	TEB
Response time@ OSR=1024		3.0		ms	
Long term stability		±0.1		%FSS/yr	

NOTE:

1.Accuracy:Include linearity , pressure hysteresis errors, and repeatability.

2.TEB : Total error band consists of offset and span temperature and calibration errors, linearity and pressure hysteresis errors, offset warm-up shift and offset position sensitivity errors.

5.2 Temperature

Parameter	Symbol	Conditions	Min	Typ	Max	Unit
Operation Temperature Range	T_{OP}		-40	25	85	℃
Temperature Absolute Accuracy		-20~60℃		±0.5		℃
Temperature Resolution of Output Data				0.01		℃

AIoTsensing

6. Block Diagram

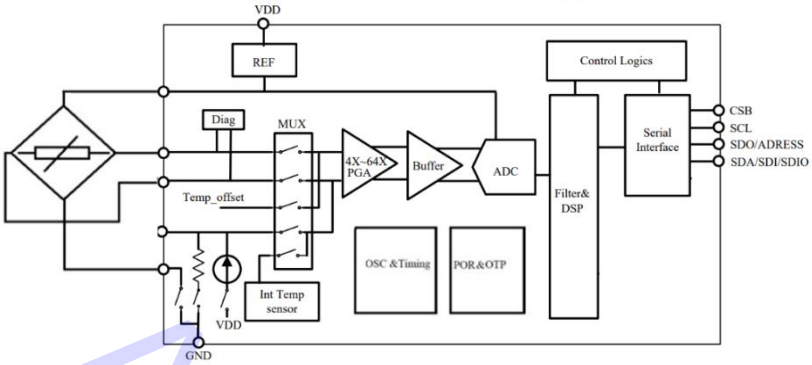

Figure 1: Functional Block Diagram

7. Electrical Specifications

7.1 Electrical Characteristics

Table7.1: DC Characteristics @VDD=3.3V, T=25℃ unless otherwise noted

Parameter	Symbol	Conditions	Min	Typ	Max	Unit
Operation Supply Voltage	V_{DD}			3.3		V
Operation Temperature	T_{OP}		-40		85	℃
Supply Current @25°C on during conversion	I_{BDD}_pga on	PGA on (Gain>=4)		1.8	2.5	mA
Conversion time	Tc	OSR 32768 16384 8192 4096 2048 1024 512 256		43.0 35.0 12.0 7.0 4.0 3.0 2.0 2.0		ms
Supply current (1 sample per sec.)	Idd	OSR 32768 16384 8192 4096 2048 1024 512 256		77.4 63.0 21.6 12.6 7.2 5.4 3.6 3.6	107.5 87.5 30 17.5 10 7.5 5.0 5.0	uA
Power up reset time	PURT		15	30		ms
Standby Supply Current	I_{DDSTB}	At25℃		0.1	0.2	µA
Serial Data Clock Frequency	f_{SCLK}	I^2C protocol		100	400	kHz
		SPI protocol			10	MHz
Digital Input High Voltage	V_{IH}		0.8			V
Digital Input Low Voltage	V_{IL}				0.2	V
Digital Output High Voltage	V_{OH}	IO=0.5mA	0.9			V
Digital Output Low Voltage	V_{OL}	IO=0.5mA			0.1	V
Input Capacitance	C_{IN}			4.7		pF

AIoTsensing

7.2 Absolute Maximum Rating

Table7.2: Absolute Maximum Rating

Parameter	Symbol	Conditions	Min	Typ	Max	Unit
Supply Voltage	V_{DD}		-0.3		5.5	V
Interface Voltage	V_{IF}		-0.3		VDD+0.3	V
Storage Temperature Range	T_{STG}		-40		125	℃
ESD Rating		Human body model	-2		+2	kV
Latch-up Current		At 85℃	-100		100	mA

Stresses above those listed as "absolute maximum ratings" may cause permanent damage to the device. This is a stress rating only and functional operation of the device under these conditions is not implied. Exposure to maximum rating conditions for extended periods may affect device reliability.

8. Function Descriptions

8.1 General Description

The AS77 series consists of a piezo-resistive sensor and a sensor interface I^2C. The main function of the I^2C is to convert the uncompensated analogue output voltage from the piezo-resistive pressure sensor to a 24-bit digital value, as well as providing a 16-bit digital value for the temperature of the sensor, and compensates them by a patented algorithm. The fully-compensated values can be read out by external MCU.

8.2 Factory Calibration

Every sensor is individually factory calibrated for sensitivity and offset for both of the temperature and pressure measurements; further calibrations are not necessary to be done by the user. The OTP registers are used to store the configurations and calibration coefficients for the sensor.

8.3 Sensor Output Conversion

For each pressure measurement, customer used to send a conversion command to the sensor, read back the conversion data from the normal register to be stored from 0x06 to 0x0a, the pressure data is stored from 0x06 to 0x08, the highest bit is sign bit, the temperature data is stored from 0x09 to 0x0a, the highest bit is sign bit. All the data are sent starting from the MSB.

8.4 Serial Interface

The AS77 provides both SPI and I^2C interface for serial communication and 'CSB' pin is used to switch between these two protocols. Pulling 'CSB' pin low selects the SPI interface, leaving 'CSB' pin float or puling it high selects the I^2C interface.

PIN CSB	MODE	PIN USED	NOTE
Float	I^2C	SDA, SCL	
Low	SPI	SDI, SDO, SCK	Default 3SPI

AIoTSensing

9. Register

All the registers can be departed into normal registers and OTP registers. The normal registers are used to send a conversion command to the Sensor, read back the conversion data and perform the OTP blowing. The OTP registers are used to store the configurations and calibration coefficients for the Sensor, whose default values can be programmed by the inside OTP banks.

9.1. Normal Register

Table8.1 normal registers

Addr	Description	R/W	Bit7	Bit6	Bit5	Bit4	Bit3	Bit2	Bit1	Bit0	Default
0x00	SPI _Ctrl	RW	SDO_active	LSB_first	Softreset			Softreset	LSB_first	SDO_active	0x00
0x01	Part_ID	R	PartID								0x00
0x02	Status	R	Error_code						1'b0	DRDY	
0x06	DATA_MSB	R	Data out[23:16]								0x00
0x07	DATA_CSB	R	Data out[15:8]								0x00
0x08	DATA_LSB	R	Data out[7:0]								0x00
0x09	TEMP_MSB	R	Temp out[15:8]								0x00
0x0A	TEMP_LSB	R	Temp out[7:0]								0x00
0x30	CMD	RW	Sleep_time[3:0]				Sco	Measurement_ctrl]2:0]			0x00

Reg0x00

SDO_active: 1: 4-wire SPI, 0: 3-wire SPI

LSB_first: 1: LSB first for SPI interface, 0: MSB first for SPI interface

Soft_reset: 1: Reset all the registers (except 'margin'), automatically come back to 0 after reset complete.

Reg0x01

PartID: OTP programmed 8 bits Part ID, corresponding to OTP register Reg0xA4. Read only from the address 0x01.

Reg0x02

DRDY： 1, indicates once conversion complete, and the output data is ready for reading.

Error_code: When diagnostic function enabled, These bits stores the error information.

Error_code[3]: VINP short to VDD

Error_code[2]: VINP short to GND

Error_code[1]: VINN short to VDD

Error_code[0]: VINN short to GND

Reg0x06-Reg0x08

Data_out: 24 bits ADC output data when 'raw_data_on' = 0 with an LSB equals to (1/2^23)*(VEXT-PSW). 24 bits calibrated data when 'raw_data_on' = 1.

Reg0x09-Reg0x0a

Temp_out: Temperature output with an LSB equals to (1/256) °C

Reg0x30

Sleep_time[3:0]: 0000:0ms, 0001:62.5ms, 0010:125ms ... 1111: 937.5ms, only active during sleep mode conversion.

Measurement_control: 000b, indicate a single shot temperature signal conversion. 001b, indicate a single shot sensor signal conversion. 010b: indicate a combined conversion (once temperature conversion immediately followed by once sensor signal conversion). 011b: indicate a sleep mode conversion (periodically perform once combined conversion with an interval time of 'sleep_time'), 100b: OTP programming mode, enter this mode to when programming OTP banks.

Sco: 1, Start of conversion, automatically come back to 0 after conversion ends (except sleep mode conversion).

AIoTSensing

9.2 OTP Registers

Table8.2 OTP registers

Addr	Description	R/W	Bit7	Bit6	Bit5	Bit4	Bit3	Bit2	Bit1	Bit0	Default
0xa4	Part_ID	RW									OTP
0xa5	Sys_config	RW	System function,Prohibit modification							DIAG_on	OTP
0xa6	P_config	RW	System function,Prohibit modification					OSR_P[2:0]			OTP
0xa7	T_config	RW	System function,Prohibit modification					OSR_T[2:0]			OTP
0xa9		R									OTP

Reg0xA4

PartID: OTP programmed 8 bits Part ID, also can be read from address 0x01.

Reg0xA5

Diag_on: 1, Enable diagnosis function.

Reg0xA6

OSR_P: set the over sampling ratio of the sensor signal conversion channel. 000:1024X, 001:2048X, 010:4096X, 011:8192X, 100:256X, 101:512X, 110:16384X, 111:32768X.

Reg0xA7

OSR_T: set the over sampling ratio of the temperature conversion channel. 000:1024X, 001:2048X, 010:4096X, 011:8192X, 100:256X, 101:512X, 110:16384X, 111:32768X.

Reg0xA9

10. High-Speed I²C Digital Output Interface

The I²C interface is fully compatible to the official I²C protocol specification.

10.1 I²C Specification

Table9.1: I²C Slave Timing Values

Parameter	Symbol	Conditions	I²C			Unit
			Min	Typ	Max	
Clock frequency	f_{BsclB}				400	kHz
SCL low pulse	t_{BLOWB}		1.3			µs
SCL high pulse	t_{BHIGHB}		0.6			µs
SDA setup time	$t_{BSUDATB}$		0.1			µs
SDA hold time	$t_{BHDDATB}$		0.0			µs
Setup Time for a repeated start condition	$t_{BSUSTAB}$		0.6			µs
Hold time for a start condition	$t_{BHDSTAB}$		0.6			µs
Setup Time for a stop condition	$t_{BSUSTOB}$		0.6			µs
Time before a new transmission can start	t_{BBUFB}		1.3			µs

AIoTsensing

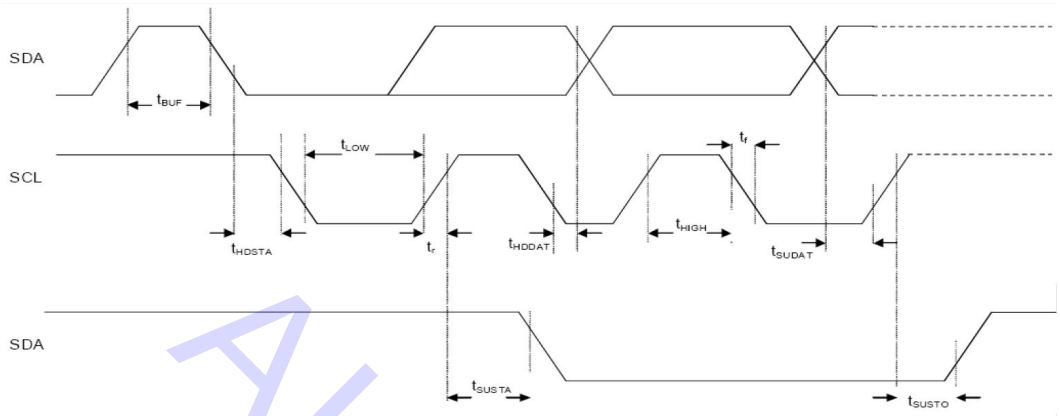

Figure 2: I²C Timing Diagram

The I²C interface protocol has special bus signal conditions. Start (S), stop (P) and binary data conditions are shown below. At start condition, SCL is high and SDA has a falling edge. Then the slave address is sent. After the 7 address bits, the direction control bit R/W selects the read or write operation. When a slave device recognizes that it is being addressed, it should acknowledge by pulling SDA low in the ninth SCL (ACK) cycle.

At stop condition, SCL is also high, but SDA has a rising edge. Data must be held stable at SDA when SCL is high. Data can change value at SDA only when SCL is low.

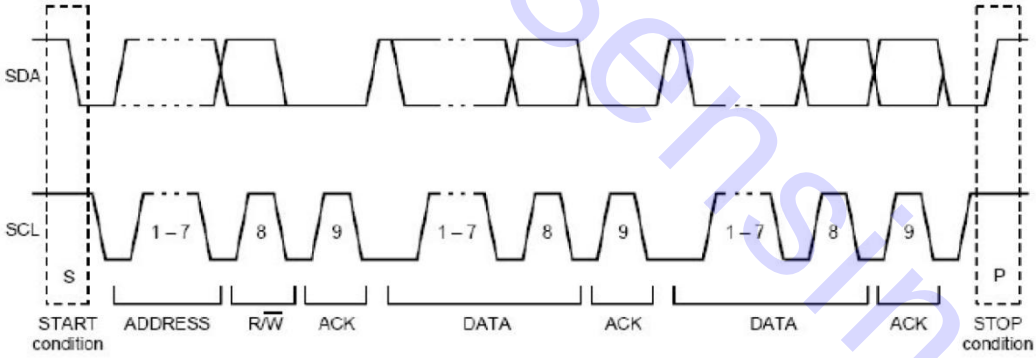

Figure 3: I²C Protocol

10.2 I²C Device Address

The I²C device address is shown below. The LSB of the device address is corresponding to address 0XDA (write) and 0XDB (read).

A7	A6	A5	A4	A3	A2	A1	W/R
1	1	0	1	1	0	SDO/ADDR	0/1

AIoTsensing

10.3 I²CProtocol

10.3.1 P_Config

From master to slave | S Start | A ACK
From slave to master | P Stop | N NACK

S	SlaveAddr	0	A	Register	A	Config_Data	A	P

Register=0XA6
Config_Data:

Address	Description	R/W	Bit7	Bit6	Bit5	Bit4	Bit3	Bit2	Bit1	Bit0	default
0xA6	P_CONFIG	RW		No change				OSR_P<2:0>			OTP

OSR_P: set the over sampling ratio of the sensor signal conversion channel. 000:1024X, 001:2048X, 010:4096X, 011:8192X, 100:256X, 101:512X, 110: 16384X, 111:32768X.

10.3.2 T_Config

From master to slave | S Start | A ACK
From slave to master | P Stop | N NACK

S	SlaveAddr	0	A	Register	A	Config_Data	A	P

Register=0XA7
Config_Data:

Address	Description	R/W	Bit7	Bit6	Bit5	Bit4	Bit3	Bit2	Bit1	Bit0	default
0xA7	T_CONFIG	RW		No change				OSR_T<2:0>			OTP

OSR_T: set the over sampling ratio of the sensor signal conversion channel. 000:1024X, 001:2048X, 010:4096X, 011:8192X, 100:256X, 101:512X, 110: 16384X, 111:32768X.

10.3.3 Send Command

From master to slave | S Start | A ACK
From slave to master | P Stop | N NACK

S	SlaveAddr	0	A	ComReg	A	CommandData	A	P

ComReg=0x30
CommandData:

Address	Description	R/W	Bit7	Bit6	Bit5	Bit4	Bit3	Bit2	Bit1	Bit0	default
0x30	CMD	RW	Sleep_time<3:0>				Sco	Measurement_ctrl<2:0>			OTP

Sleep_time<3:0>:0000:0ms, 0001:62.5ms,0010:125ms... 1111: 937.5ms, only active during sleep mode conversion.

Measurement_control<1:0>: 010b: indicate a combined conversion (once temperature conversion immediately followed by once sensor signal conversion).
Sco: 1, Start of conversion, automatically come back to 0 after conversion ends (except sleep mode conversion).

AIoTSensing

10.3.4 Read Status

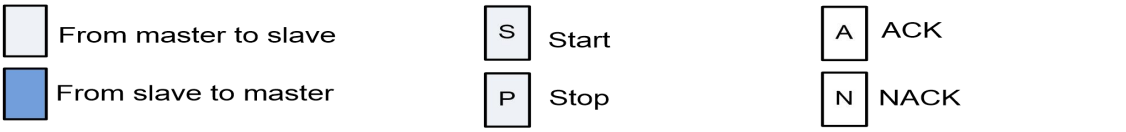

StatusReg=0x02
Status:

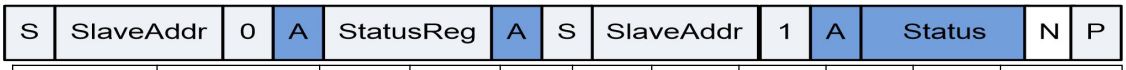

Address	Description	R/W	Bit7	Bit6	Bit5	Bit4	Bit3	Bit2	Bit1	Bit0
0x02	Status	R					1'b0			RDY

DRDY: 1, indicates once conversion complete, and the output data is ready for reading.

10.3.5 Read the Pressure & Temperature

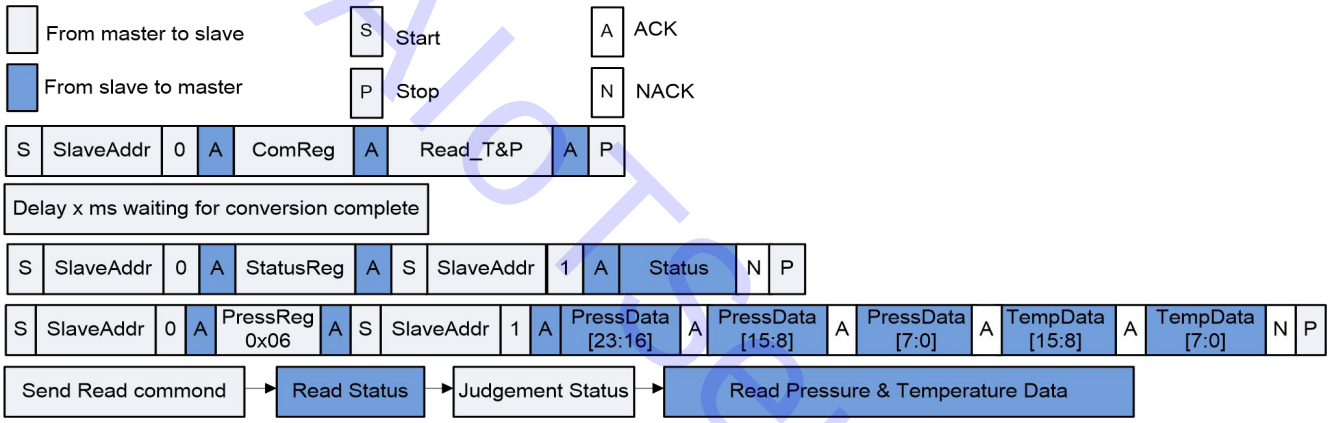

10.3.6 Calculate Pressure and Temperature

Pressure ADC bits are 24 bits 2's complement. Data format: the highest bit is the sign bit (0 is a positive number, 1 is a negative number), 23 data bits. In the 23-bit data bits, there are high N integer bits, and the low n bits are decimal bit, read the ADC number and convert it to Pa. The formula is:Pressure = Read_ADC value/2^n, the n value is stored in register 0xa9.

$$\text{Pressure}(Pa) = \left(\frac{\text{Read_PADC}[23:0]}{2\hat{}n}\right)$$

range	250Pa	500Pa	1kPa	2kPa	3~4kPa	5~8kPa	9~16kPa	17~32kPa
n	15	14	13	12	11	10	9	8
range	33~65kPa	66~100kPa	2Bar	3~5Bar	6~10Bar	11~20Bar	21~40Bar	45~86Bar
n	7	6	5	4	3	2	1	0

Temperature ADC bits are 16 bits 2's complement.Data format: the highest bit is the sign bit (0 is a positive number, 1 is a negative number),15 data bits. The high 7 bits are integer bits,the low 8 bits are decimal bits,equals to (1/256) °C.

$$\text{Temperature}(℃) = \left(\frac{\text{Read_TADC}[15:0]}{256}\right)$$

AIoTSensing

11. SPI INTERFACE

provides both SPI and I2C interface for serial communication and 'CSB' pin is used to switch between these two protocols. Pulling 'CSB' pin low selects the SPI interface, leaving 'CSB' pin float or puling it high selects the I2C interface.

11.1. INTERFACE SPECIFICATION

Table 6.1 SPI interface specifications

Symbol	Parameter	Condition	Min	Max	Unit
fBsclkB	Clock frequency	Max load on SDIO or SDO = 25pF		10	MHz
tBsclk_lB	SLCK low pulse		20		Ns
tBsclk_hB	SLCK high pulse		20		
TBsdi_setupB	SDI setup time		20		ns
TBsdi_holdB	SDI hold time		20		ns
TBsdo_odB	SDO/SDI output delay	Load = 25pF		30	ns
		Load = 250pF		40	ns
TBcsb_setupB	CSB setup time		20		ns
TBcsb_holdB	CSB hold time		40		ns

The figure below shows the definition of the SPI timing given in table 5.1

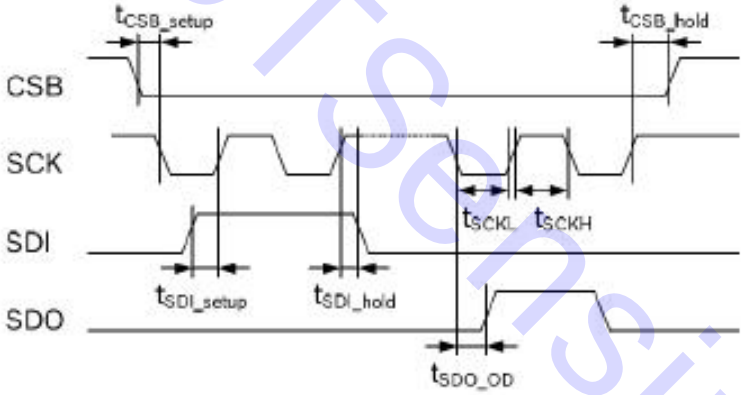

Figure 6.1 SPI timing diagram

The falling edge of CSB, in conjunction with the rising edge of SCLK, determines the start of framing. Once the beginning of the frame has been determined, timing is straightforward. The first phase of the transfer is the instruction phase, which consists of 16 bits followed by data that can be of variable lengths in multiples of 8 bits. If the device is configured with CSB tied low, framing begins with the first rising edge of SCLK. The instruction phase is the first 16 bits transmitted. As shown in Figure5.2, the instruction phase is divided into a number of bit fields.

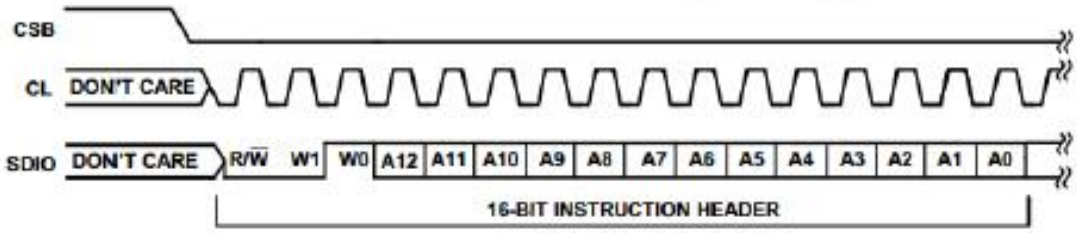

Figure5.2, Instruction Phase Bit Field.

AIoTsensing

The first bit in the stream is the read/write indicator bit (R/W). When this bit is high, a read is being requested, otherwise indicates it is a write operation. W1 and W0 represent the number of data bytes to transfer for either read or write (Table 5.2). If the number of bytes to transfer is three or less (00, 01, or 10), CSB can stall high on byte boundaries. Stalling on a nonbyte boundary terminates the communications cycle. If these bits are 11, data can be transferred until CSB transitions high.

CSB is not allowed to stall during the streaming process. The remaining 13 bits represent the starting address of the data sent. If more than one word is being sent, sequential addressing is used, starting with the one specified, and it either increments (LSB first) or decrements (MSB first) based on the mode setting.

Table6.2. W1 and W0 settings

W1:W0	Action	CSB stalling
00	1 byte of data can be transferred.	Optional
01	2 bytes of data can be transferred.	Optional
10	3 bytes of data can be transferred.	Optional
11	4 or more bytes of data can be transferred. CSB must be held low for entire sequence; otherwise, the cycle is terminated.	No

Table6.2. W1 and W0 settings

Data follows the instruction phase. The amount of data sent is determined by the word length (Bit W0 and Bit W1). This can be one or more bytes of data. All data is composed of 8-bit words. Data can be sent in either MSB-first mode or LSB-first mode (by setting 'LSB first' bit). On power up, MSB-first mode is the default. This can be changed by programming the configuration register. In MSB-first mode, the serial exchange starts with the highest-order bit and ends with the LSB. In LSB-first mode, the order is reversed. (Figure 5.3)

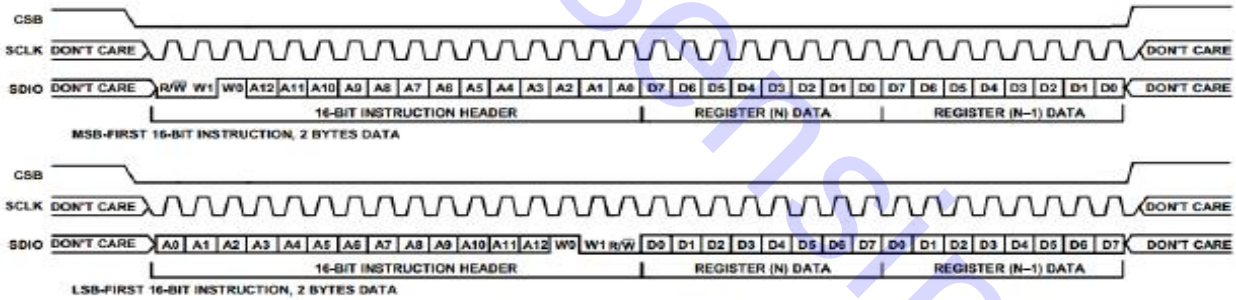

Figure5.3: MSB First and LSB First Instruction and Data Phases

Register bit 'SDO_active' is responsible for activating SDO on devices. If this bit is cleared, then SDO is inactive and read data is routed to the SDIO pin. If this bit is set, read data is placed on the SDO pin. The default for this bit is low, making SDO inactive.

11.2. SPI Protocol

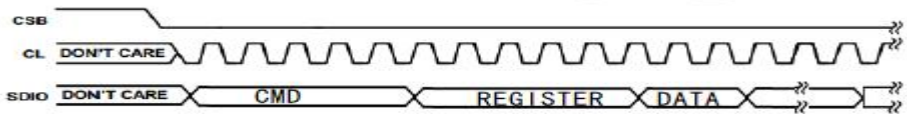

11.2.1 SPI Write one byte

CMD:0X00

11.2.2 SPI Read one byte

CMD:0X80

11.2.3 SPI Read Sensor (Pressure and Temperature)

Send Read cmd (0x00)(0x30)(0x0A)	A	WaitADC	Read 0x06	Read 0x07	Read 0x08	Read 0x09	Read 0x0A

AIoTSensing

12. Application Circuit

12.1 I²C Interface

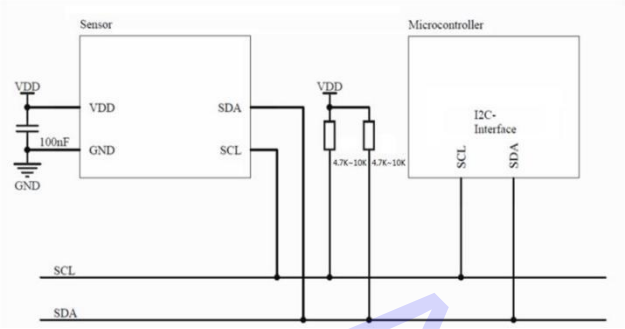

12.2 SPI Interface

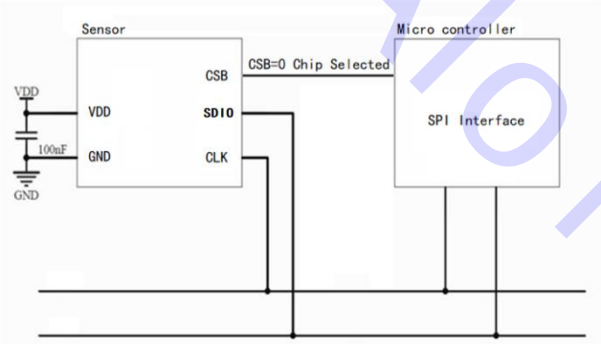

12.3 Pin Configuration and Description

Pin	Name	Type	Function
1	GND	G	Power Ground
2	VDD	P	Positive supply voltage
3	CSB	I	Chip select（Float I² C / Low SPI）
4	ADR/SD0	I/O	Serial data output in 4-wire SPI mode Address select in I² C mode
5	SDA/SDI/SDIO	I/O	Serial data input/output in I2C mode (SDA) Serial data input in 4-wire SPI mode (SDI) Serial data input/output in 3-wire SPI mode (SDIO)
6	SCL	I	Serial data clock
Others	NC	NC	Not Connect

NOTE:

• Do not connect to NC pins.

AIoTSensing

13. Package Outline (mm)

13.1 AS77

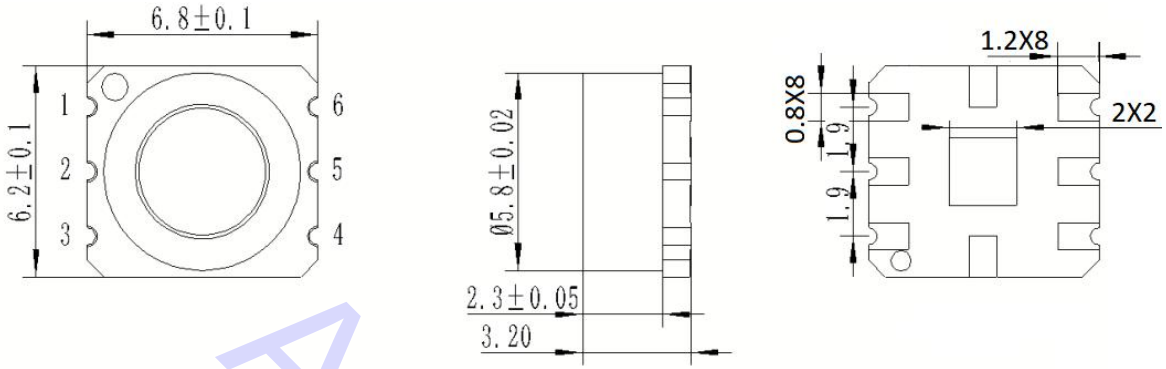

13.2 AS77S

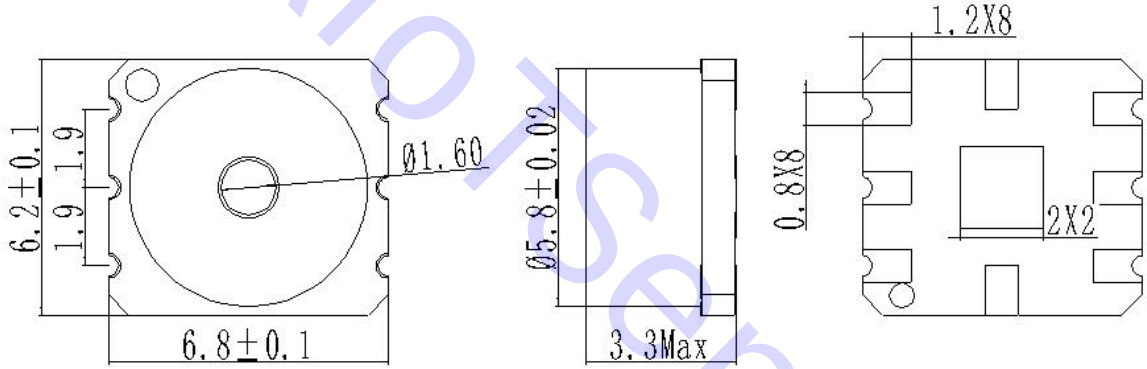

13.3 AS77P

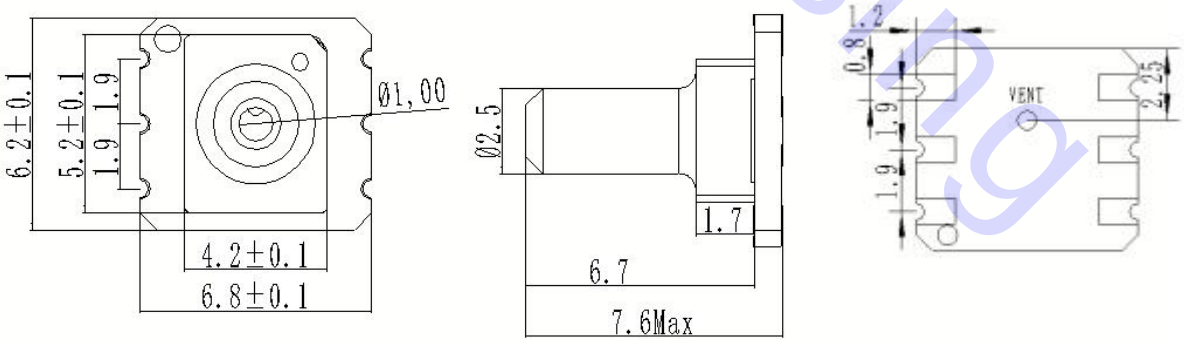

AIoTsensing

13.4 AS77H(Gauge)

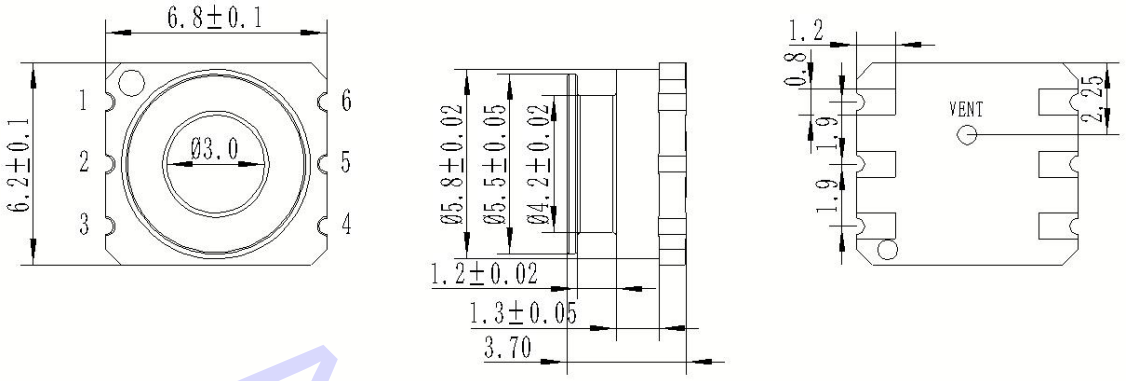

13.5 Recommend to the "O" ring select

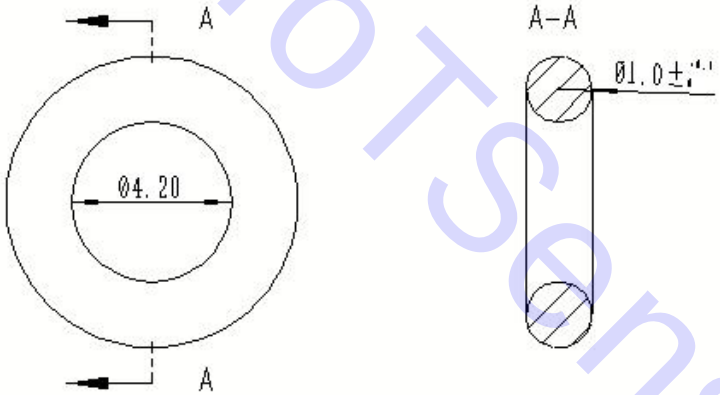

Silicon rubber
hardness 50±5 shore A for the pressure range lessthan 1MPa(include),
hardness 70±5 shore A for the pressure range morethan 1MPa.

NOTES:

• All dimensions in units of [mm]

AIoTSensing

14. Recommended Pad Layout (unit: mm)

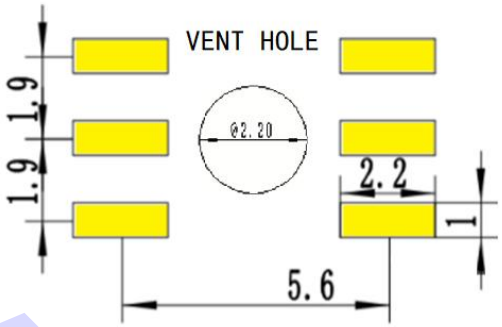

15.Packing Options

TUBE

Real

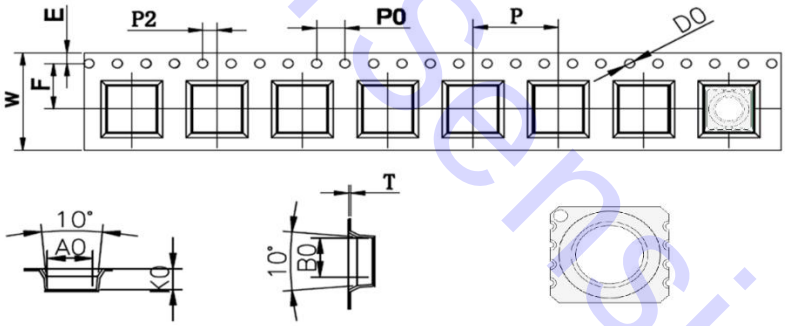

16.How to Order

Refer to Table 5 for standard part numbers offered which includes the pressure range and package.

Example P/N with options: AS77-01BA-W10

Table 5 - Part Numbering Scheme:

AS77	-	001	B	A-	w	10	c

Product Series	Default: (6.8*6.2*3.2)mm	Pressure Range	Pressure Unit	Pressure Type		Customer Code	Temp.
	S: (6.8*6.2*3.3)mm		B bar	A Absolute	G Gas		C: 0~50℃
	H: (6.8*6.2*3.7)mm		K kPa	G Gage	W Water proof		S: -20~60℃
	P: (6.8*6.2*7.6)mm				C Corrosion Proof		T:TBD

AIoTsensing

17. Soldering Recommendation（IPC/JEDEC J-STD-020D）

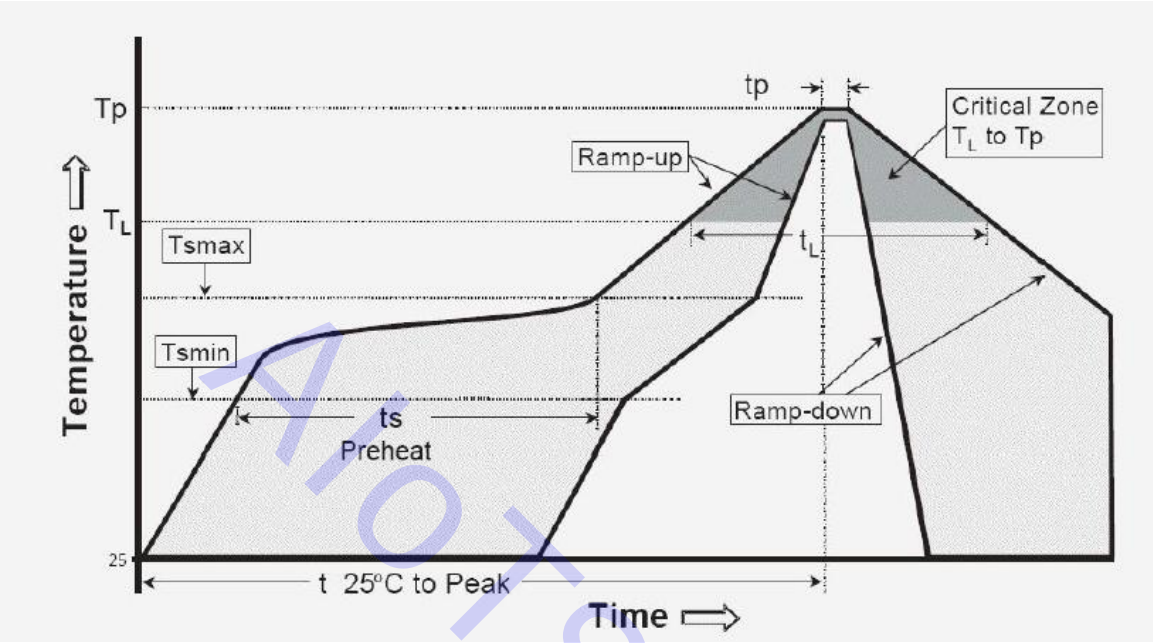

IPC/JEDEC J-STD-020D	Pb-Free Assembly
Average Ramp-up rate（TL-Tp）	1~3℃/s（Max.）
Preheat –Temperature Min. (Tsmin) –Temperature Max. (Tsmax) –Time (Min. to Max.) (ts)	 140℃ 170℃ 60-90 seconds
Tsmax to TL –Tp	3℃/s（Max.）
Time maintained above: –Temperature (TL) –Time (tL)	 200℃ above 40-90 seconds
Peak temperature (Tp)	200~220℃
Time of Real peak temperature within 5℃ (tp)	60 seconds
Average Ramp-down rate（Tp-TL）	2~4℃/s（Max.）
Time 25℃ to peak temperature	4min.（Max.）

Note：
1) It is recommended that only one time reflow soldering, no more than two times.
2) After reflow soldering or other high temperature processes, wait for at least 48 hours (or as required by the data sheet) before data reading and processing.
3) Spot cleaning by hand if necessary, DO NOT wash or submerge sensor in cleaning liquid.
4) It is recommended to use the medium temperature solder paste.

AIoTsensing

18.Sensor Reading

```
void Read_AIOT_Sensor(void)
{
        u32 PressData , TempData;
        u8 Status = 0x00;
        u8 Read_Data[7] = {0x00};
        IIC_Init();
        delay_ms(50);
        IIC_Start();
        IIC_Send_Byte(0xda);//0xda//0xd8
        IIC_Wait_Ack();
        IIC_Send_Byte(0x30);
        IIC_Wait_Ack();
        IIC_Send_Byte(0x0A);//PT_Read
        IIC_Wait_Ack();
        delay_ms(100);
        IIC_Stop();//
        IIC_Start();
        IIC_Send_Byte(0xda);
        IIC_Wait_Ack();
        IIC_Send_Byte(0x02);
        IIC_Wait_Ack();
        IIC_Start();
        IIC_Send_Byte(0xdb);//0xdb//0xd9
        IIC_Wait_Ack();
        Read_Data[0]=IIC_Read_Byte(0);
        IIC_Stop();
        Status = Read_Data[0];
        if(Status & 0x01)
        {
                IIC_Start();
                IIC_Send_Byte(0xda);
                IIC_Wait_Ack();
                IIC_Send_Byte(0x06);
                IIC_Wait_Ack();
                IIC_Start();
                IIC_Send_Byte(0xdb);
                IIC_Wait_Ack();
                Read_Data[1] = IIC_Read_Byte(1);//PRESSURE[23:16]
                Read_Data[2] = IIC_Read_Byte(1);//PRESSURE[15:8]
                Read_Data[3] = IIC_Read_Byte(1);//PRESSURE[7:0]
                Read_Data[4] = IIC_Read_Byte(1);//TEMPERATURE15:8]
                Read_Data[5] = IIC_Read_Byte(0);//TEMPERATURE[7:0]
                IIC_Stop();
                PressData = (Read_Data[1]*6553616)+(Read_Data[2]*256)+Read_Data[3];
                TempData  = (Read_Data[4]*256)*Read_Data[5];
        }
}
```

AIoTSensing

19.Legal Disclaimer

1)For the export of products which are controlled items subject to foreign and domestic export laws and regulations, you must obtain approval and/or follow the formalities of such laws and regulations.

2)Products must not be used for military and/or antisocial purposes such as terrorism, and shall not be supplied to any party intending to use the products for such purposes.

3)Unless provided otherwise, the products have been designed and manufactured for application to equipment and devices which are sold to end-users in the market.

4)Before using products, which were not specifically designed for use in automotive applications, please contact an AIOT sales representative.

5)This specification is subject to change without notice.

AIoTSensing

AIoTSensing Inc.

TEL: +86 0551-65336537

Email: sales@aiotsensing.com

Website: http://www.aiotsensing.com

Address: 2nd Floor, Building 4, Mingzhu Industrial Park, No. 106, Chuangxin Avenue, High-tech Zone, Hefei City, 230088 China