M23-12P2N8AWB00S - Device connector front mounting

1329289

https://www.phoenixcontact.com/us/products/1329289

Please be informed that the data shown in this PDF document is generated from our online catalog. Please find the complete data in the user documentation. Our general terms of use for downloads are valid.

M23, Device connector front mounting, series: M23 PRO, straight, shielded: yes, for standard and ONECLICK fast locking system, No. of pos.: 12, Direction of rotation: Counter direction, contact connection type: Pin, Crimp connection, 4x Ø 2.7 mm, flange dimensions: 26 mm x 26 mm, coding: N, Item is lead-free in accordance with RoHS II without Exemption 6c (Pb < 0. 1 %)

Your advantages

- Solutions with cross-manufacturer compatibility for standard and fast locking systems
- Modern, consistent design for highly convenient operation
- Crimping connection: vibration- and temperature-resistant assembly
- All housing can be fitted with pin or socket contacts
- Safe use in the field, thanks to high degree of protection

Commercial data

Item number	1329289
Packing unit	1 pc
Minimum order quantity	1 pc
Sales key	AB30
Product key	ABRABL
GTIN	4063151623135
Weight per piece (including packing)	40.22 g
Weight per piece (excluding packing)	39.6 g
Customs tariff number	85366990
Country of origin	DE

M23-12P2N8AWB00S - Device connector front mounting

1329289

https://www.phoenixcontact.com/us/products/1329289

Technical data

Notes

Order information:	Order 12 x 1 mm crimp contacts separately
Notes on operation	Please observe the derating curve.

Safety note

Safety note	WARNING: The connectors may not be plugged in or disconnected under load. Ignoring the warning or improper use may damage persons and/or property.
	• WARNING: Commission properly functioning products only. The products must be regularly inspected for damage. Decommission defective products immediately. Replace damaged products. Repairs are not possible.
	• WARNING: Only electrically qualified personnel may install and operate the product. They must observe the following safety notes. The qualified personnel must be familiar with the basics of electrical engineering. They must be able to recognize and prevent danger. The relevant symbol on the packaging indicates that only personnel familiar with electrical engineering are allowed to install and operate the product.
	• The products are suitable for applications in plant, controller, and electrical device engineering.
	• When operating the connectors in outdoor applications, they must be separately protected against environmental influences.
	• Assembled products may not be manipulated or improperly opened.
	• Only use mating connectors that are specified in the technical data of the standards listed (e.g. the ones listed in the product accessories online at phoenixcontact.com/products).
	• When using the product in direct connection with third-party manufacturers, the user is responsible.
	• For operating voltages > 50 V AC, conductive connector housings must be grounded
	• Ensure that the protective or functional ground has been properly connected.
	• VDE 0100/1.97 § 411.1.3.2 and DIN EN 60 204/11.98 § 14.1.3 are applicable when combining several circuits in a cable and/or connector
	• Only use tools recommended by Phoenix Contact
	• The installation notes/Design In documents online on the download page at phoenixcontact.com/products must be observed for this product.
	• Operate the connector only when it is fully plugged in and interlocked.
	• Ensure that when laying the cable, the tensile load on the connectors does not exceed the upper limit specified in the standards.
	• Observe the minimum bending radius of the cable. Lay the cable without twisting it.
	• The connector warms up in normal operation. Depending on the ambient conditions, the surface of the connector can continue to

	warm up. In this case, the user is responsible for posting warnings (e.g. DIN EN ISO 13732-1:2008-12).

Product properties

Product type	Circular connectors (device side)

Data management status

Article revision	01

Connector

Insulating body

Note	Order information: Order crimp contacts Ø 1 mm separately
Coding	N
Insulation body material	PA 6.6
Insertion/withdrawal cycles	100
Connection method	Crimp connection
Contact switching type	Pin
Application	Signal
Number of positions	12
Direction of rotation	Counter direction
Connection profile	12
Contact diameter Signal contacts	1 mm
Litz wire cross-section Signal contacts min.	0.08 mm²
Litz wire cross-section Signal contacts max.	1 mm²
Nominal current per signal contact	8 A
Note	for max. connection cross section
Rated voltage Signal contact	150 V
Rated surge voltage	2.5 kV
Overvoltage category	III
Degree of pollution	3
Installation height	2000 m

Housing

Housing material	GD-Zn
Flange dimensions	26 mm x 26 mm
Type of locking	for standard and ONECLICK fast locking system
Degree of protection (plugged in)	IP66 / IP68 (2m / 24h) / IP69K
Thread type	M23

Environmental and real-life conditions

Ambient conditions

Degree of protection	IP68
Ambient temperature (operation)	-40 °C ... 105 °C (see to derating)

Altitude	2000 m
Permanent temperature	125 °C (DIN EN 60512-9-2 / 1000 h)

Drawings

Diagram

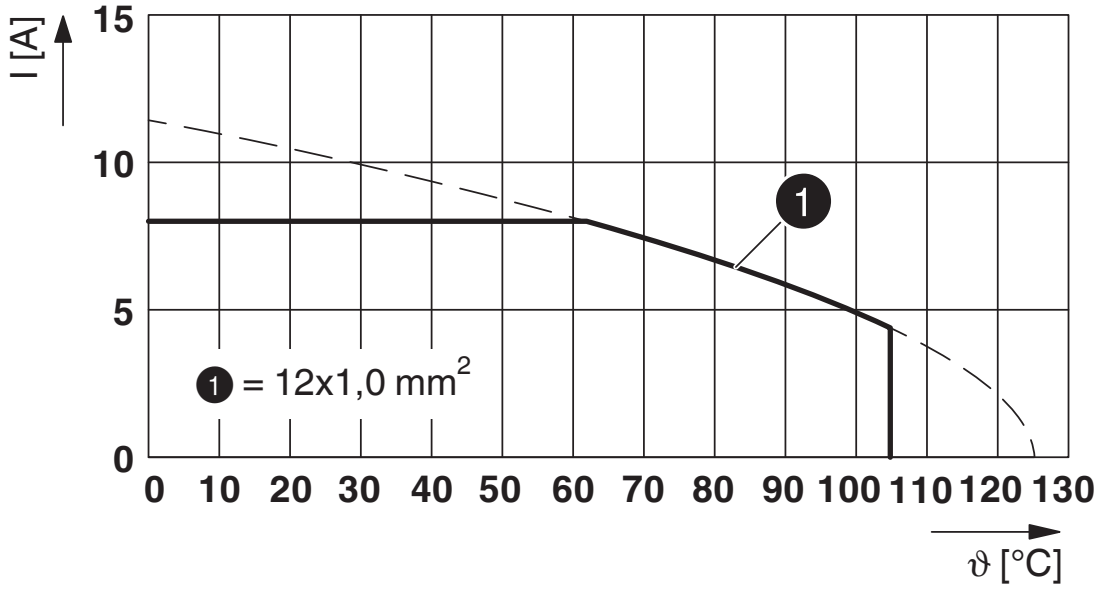

I = current strength, ϑ = ambient temperature, 12x 8 A

Schematic diagram

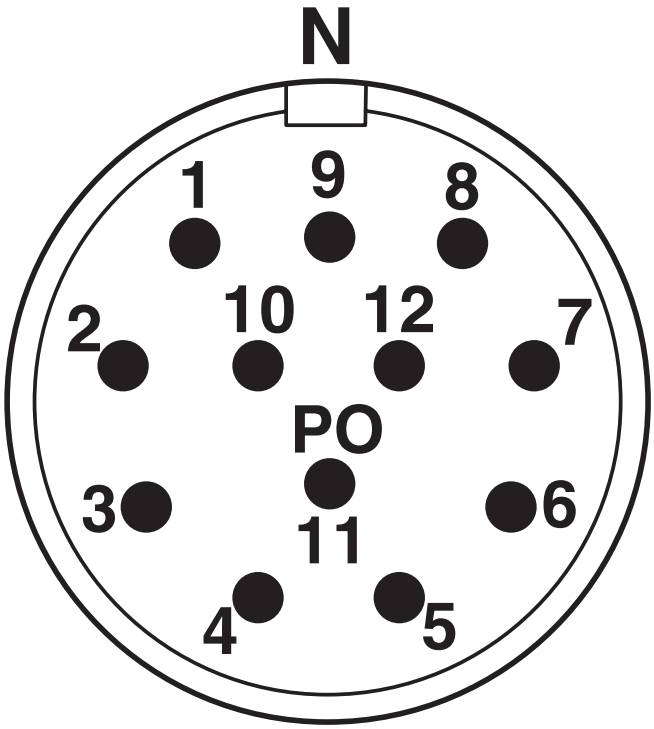

Connector pin assignment

Dimensional drawing

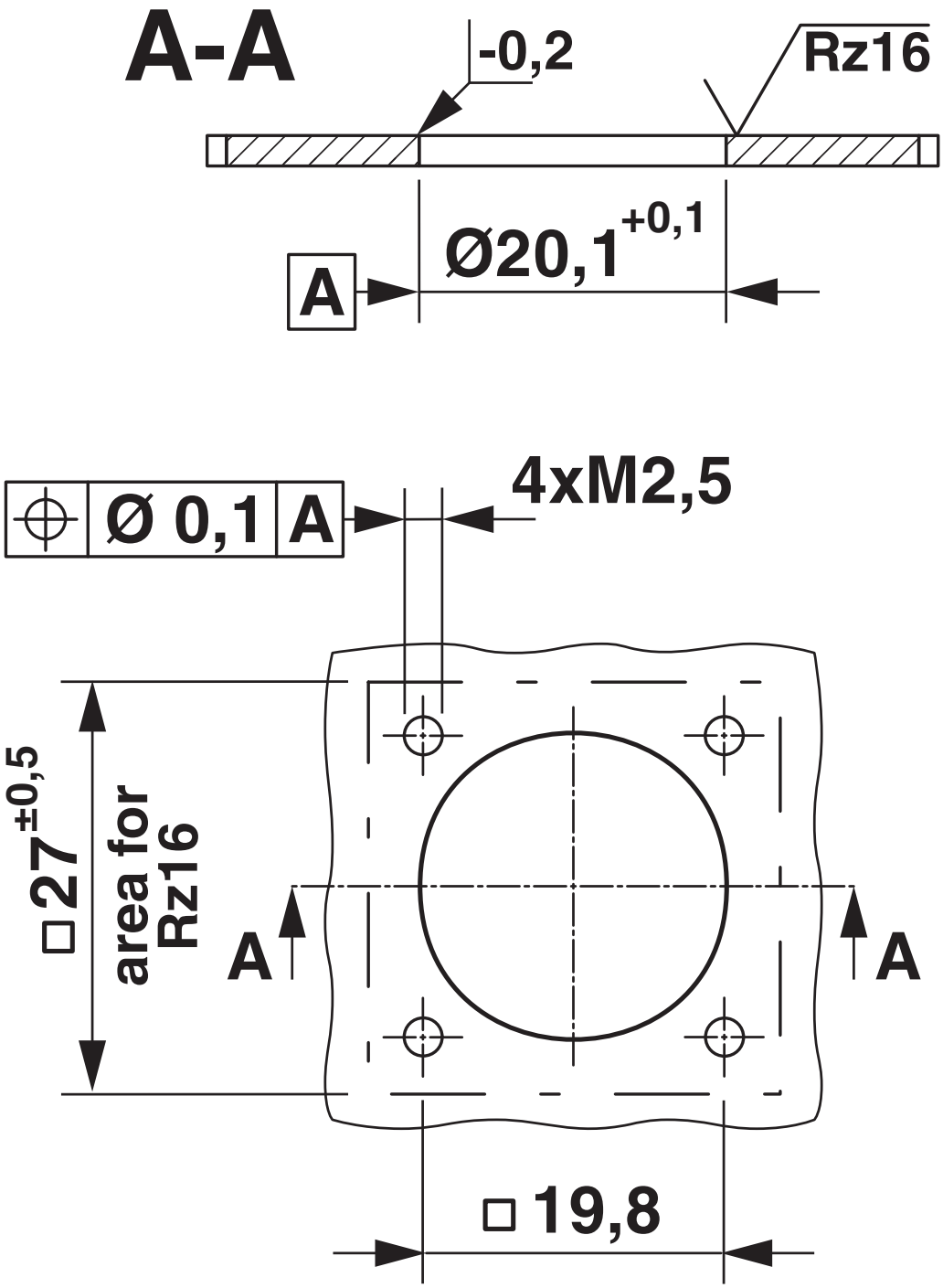

Installation dimensions

Classifications

ECLASS

ECLASS-11.0	27440102
ECLASS-12.0	27440116
ECLASS-13.0	27440116

ETIM

ETIM 9.0	EC002635

UNSPSC

UNSPSC 21.0	39121400

Environmental product compliance

EU RoHS

Fulfills EU RoHS substance requirements	Yes, No exemptions

China RoHS

Environment friendly use period (EFUP)	EFUP-E
	No hazardous substances above the limits

EU REACH SVHC

REACH candidate substance (CAS No.)	No substance above 0.1 wt%

Phoenix Contact 2024 © - all rights reserved
https://www.phoenixcontact.com

Phoenix Contact USA
586 Fulling Mill Road
Middletown, PA 17057, United States
(+717) 944-1300
info@phoenixcon.com