MALE SHORT-CIRCUIT CAP WITH CHAIN

R161.862.000

SERIES N

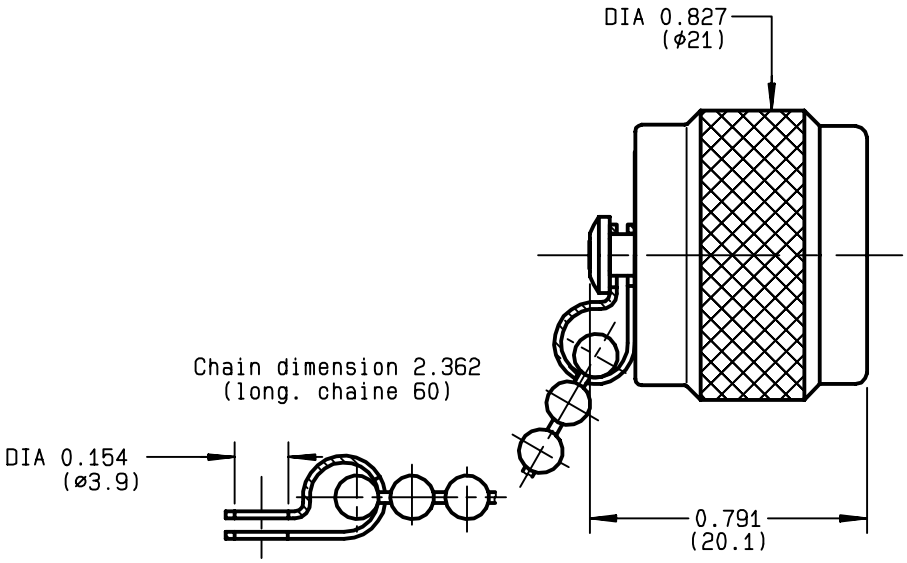

NOMINAL IMPEDANCE	**NA**	Ω
FREQUENCY RANGE	**NA**	GHz
TEMPERATURE RATING	**-55/+155**	°C
V.S.W.R	**NA** +	x F(GHz)Maxi
RF INSERTION LOSS	**NA**	√F(GHz) dB Maxi
VOLTAGE RATING	**NA**	Veff Maxi
DIELECTRIC WITHSTANDING VOLTAGE	**NA**	Veff Mini
INSULATION RESISTANCE	**NA**	MΩMini
HERMETIC SEAL	**NA**	$Atm.cm^3/s$
LEAKAGE (pressurized only)	**NA**	
MECHANICAL DURABILITY	**500**	Cycles
WEIGHT	**32**	gr
SPECIFICATION		

CABLES :

OTHERS CHARACTERISTICS

CABLE RETENTION	**NA**	N Mini
CENTER CONTACT RETENTION		
Axial force - mating end	**NA**	N Mini
Axial force - opposite end	**NA**	N Mini
Torque	**NA**	cm.N Mini
RECOMMENDED TORQUES		
Mating	**130**	cm.N
Panel nut	**NA**	cm.N
Clamp nut	**NA**	cm.N

CONNECTOR PARTS	MATERIALS	FINISH (all values are given in micrometers)
BODY	BRASS	BBR 2
OUTER CONTACT	BRASS	BBR 2
CENTER CONTACT	BRASS	GOLD 0.5 OVER NICKEL 2
INSULATOR		-
GASKET	SILICONE RUBBER	-
OTHERS PIECES	BRASS	BBR 2

ISSUE	CREATION DATE	FILE PART-NUMBER
9812N01	17/06/1993	EPC 96-07

BONOMINI

RADIALL®

The information given here is subject to change without notice.
Design changes may be in order to improve the product .

Connect to the future