REVISION			
LTR	DESCRIPTION	DATE	APP
A0	NEW RELEASE	05/20/2020	PECK

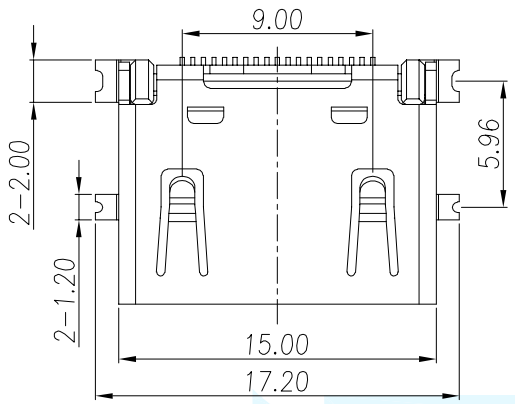

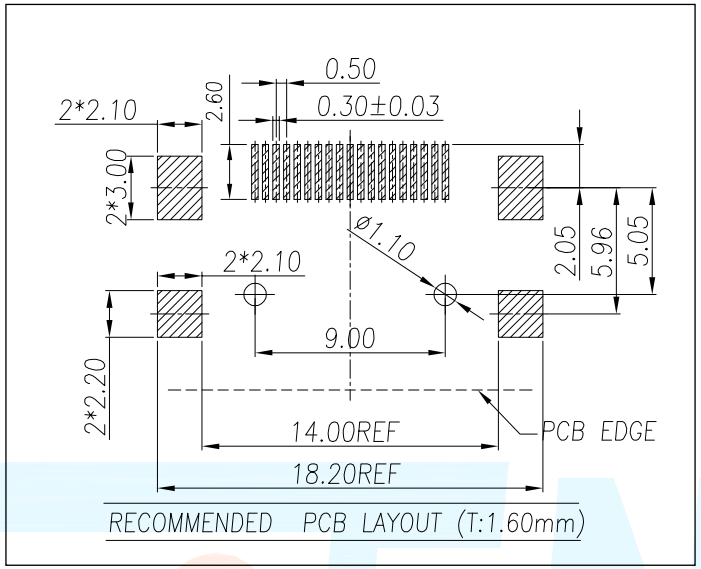

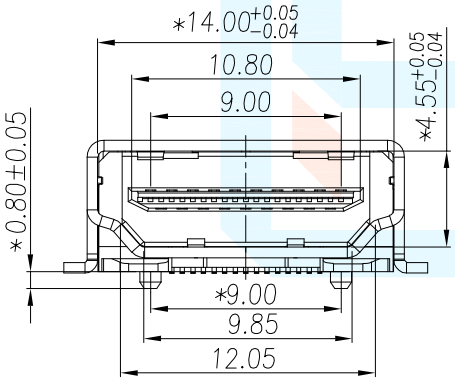

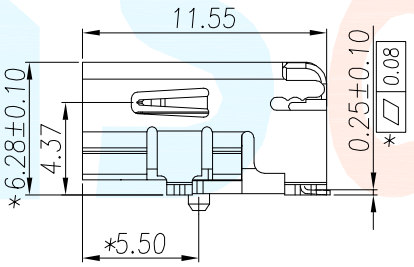

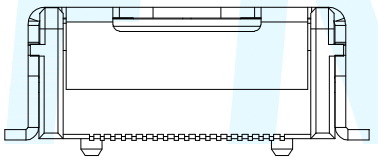

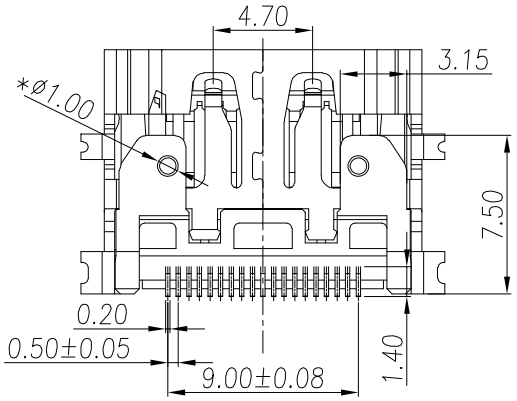

邀您使用(微信)小程序
硕方电子开关&连接器选型手册
手机扫码即可进入...

Note:
1.Material:
1.1 Housing: High temperature thermoplastic,UL94v-0
1.2 Orbit: High temperature thermoplastic,UL94v-0
1.3 Contact: copper alloy,;
Gold plated contact area;Tin plated solder area
1.4 Shell:Stainless;Ni plated allover;
Gold plated solder area

2.Specification:
2.1 Current rating: 0.5A Max
2.2 Voltage rating: 5V DC
2.3 Dielectric withstanding woltage:
500V(AC) for 1 min.
2.4 Contact resistance: 100mΩ Max.
2.5 Insulation resistance: 1000MΩ min.
2.6 Temperature range: -25°C~85°C
2.7 Mating cycle:5000 cycles min
2.8 Insert force: 40N Max
Extration force: 0.5~40N

DIMENSION CLASSIFICATION			台灣碩方精密電子科技有限公司 TAIWAN SOFNG PRECISION ELECTRONIC CO., LTD					
■ : CRITICAL								
☒ : MAJOR			TITLE	HDMI-019S-S 全贴片式HDMI连接器				SOFNG 開關,連接器
TOLERANCE TABLE								
.X	±	0.40	PART NO.	HDMI-019S-S			SERIES	SD106
.XX	±	0.25	APPROVED	Peck	DWG NO.			
.XXX	±	0.10	CHECKED	Paul	SCALE 1:1	UNIT mm	SIZE	A4
ANGLE	±	2°	DRAWIN	David		REV A0	SHEET NO.	1/1