FOR-1351 Rev.1.0

REVISION RECORD				
REV	ECN	DESCRIPTION	DRFT	DATE

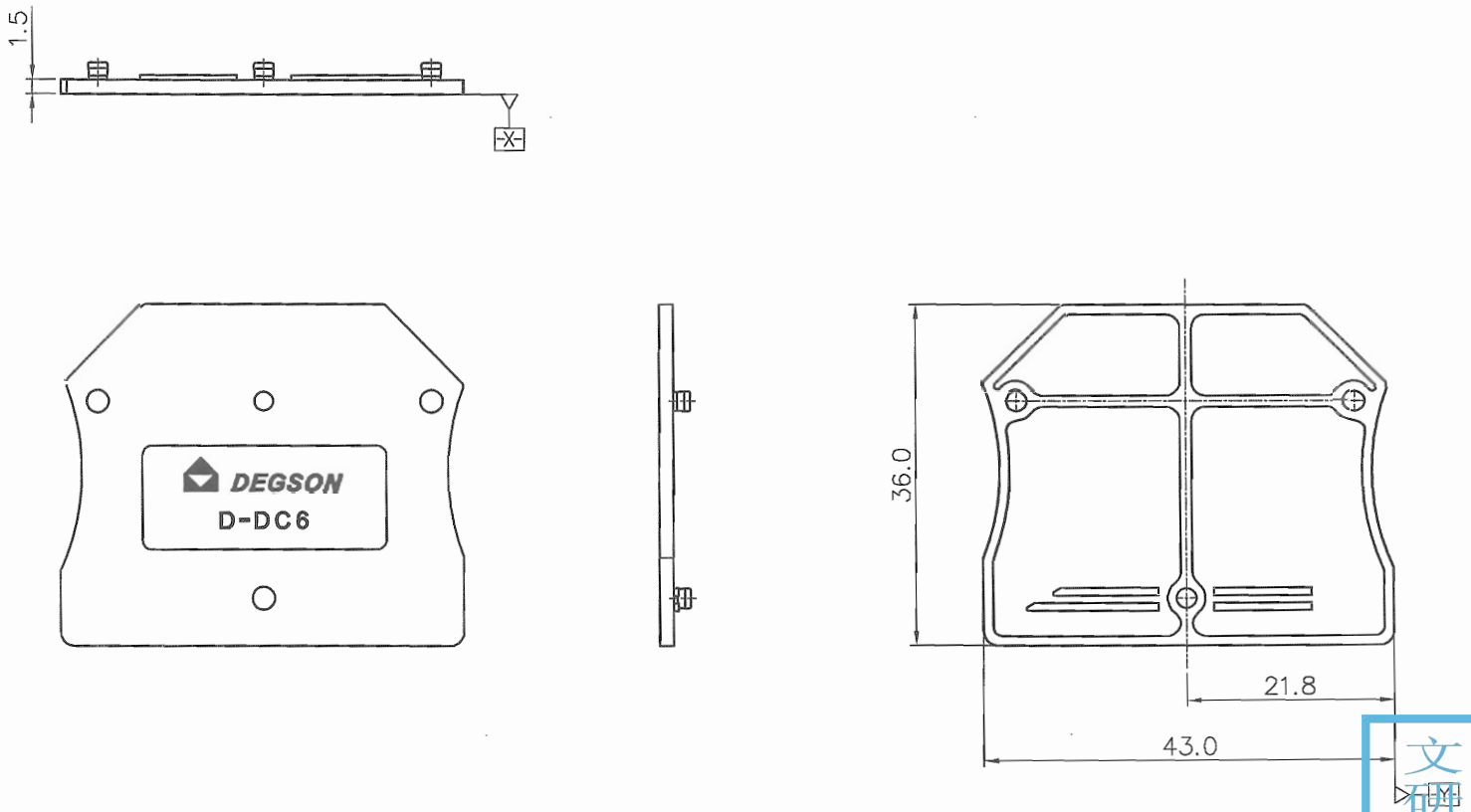

文管中心
研发专用
（仅限内部使用，对外无效）

NOTES:

1. Dimension shall be interpreted per ASME Y14.5-2009
2. Operating temperature: -40°C~+105°C
3. Undimensioned tolerances:

Pitch Range In mm			Nominal Dimension Range In mm						
TO 6	Over 6 TO 10	Over 10 TO 24	TO 30	Over 30 TO 60	Over 60 TO 100	Over 100 TO 150	Over 150	0.1/10	
±0.15	±0.20	±0.30	±0.30	±0.50	±0.70	±1.00	±1.30	±2°	

4. RoHS Compliance

ITEM	NAME OF PART	MATERIAL	NOTES
1	COVER	PASS	UL94V-0

DETACHED LISTS

PART NO.: /

APPD: Jason 2018.1.40

CHKD: Frank 2018.01.29

DRFT: ding 2016.12.09

THIRD ANGLE PROJECTION

DEGSON® 宁波高松电子有限公司 NINGBO DEGSON ELECTRICAL CO., LTD

NAME: D-DC6-01P-1Y-00A(H)

TITLE: CUSTOMER DRAWING

REV: T0

DRAWING NO.: D-DC6-C01

SHEET: 1/1

MM (INCH) DO NOT SCALE DRAWING

SCALE: 1:1