ROHS

HF 无卤

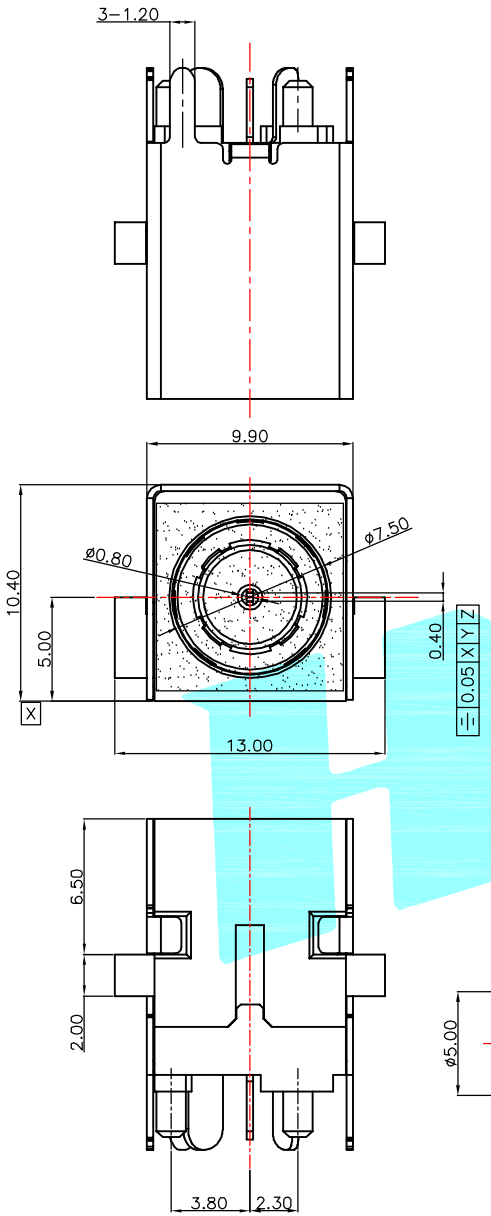

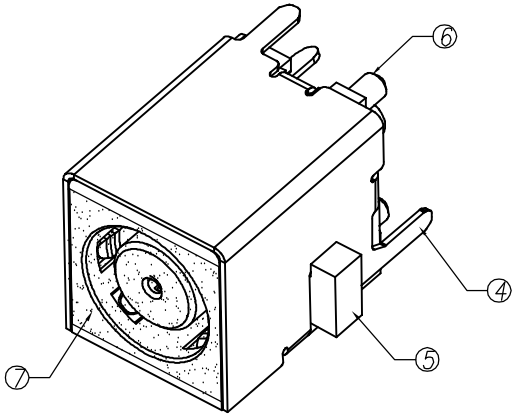

SCHEMATIC

3(−) SPRING
2(+) CONTACT
1 SINGNAL

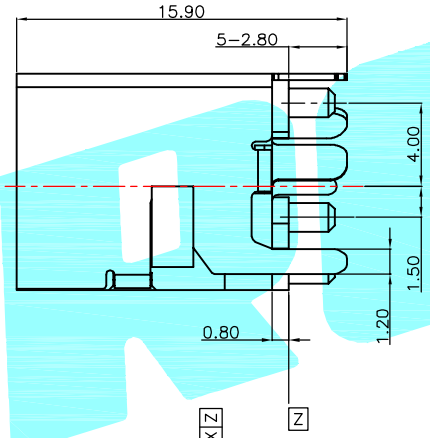

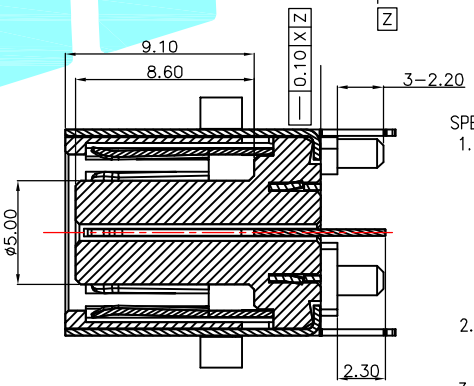

SECTION A-A

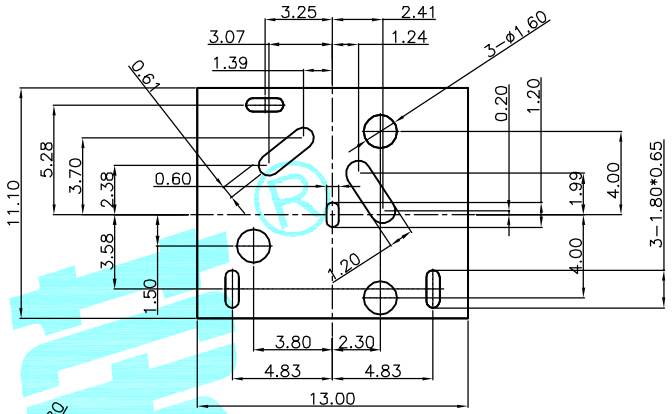

PCB LAYOUT TOP VIEW

TOLERANCES:±0.05

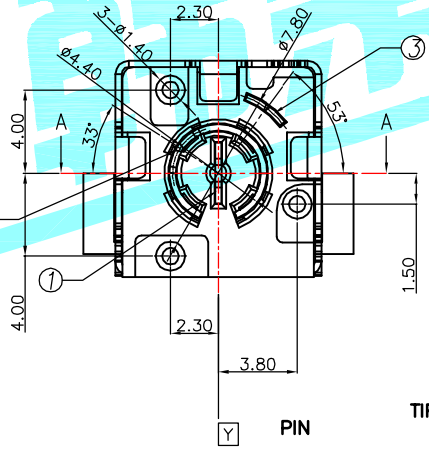

PIN

TIP SPERING

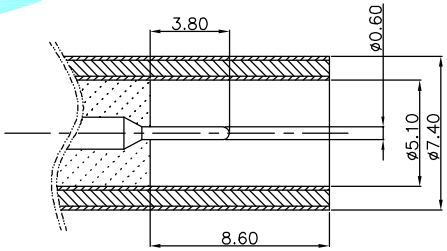

DC PLUG

SPECIFICATIONS:

1. ELECTRICAL CHARACTERISTICS:
   1-1. RATING: 20V, 7A Min.
   1-2. CONTACT RESISTANCE:
   50 MILLIOHMS Max. FOR INITIAL,
   80 MILLIOHMS Max. AFTER 5000 CYCLES.
   1-3. INSULATION RESISTANCE: 100 MEGAOHMS Min. BY 500V DC AFTER 1 MINUTE.
   1-4. DIELECTRIC WITHSTANDING VOLTAGE: 500V RMS AFTER 1 MINUTE.
2. MECHANICAL CHARACTERISTICS:
   2-1. INSERTION FORCE : 0.3~3.0 KGF(2.94~29.4N)
   2-2. WITHDRAWAL FORCE : 0.3~3.0 KGF(2.94~29.4N)
3. LIFE TEST: 5,000 CYCLES MIN.

ITEM	PART NAME	TER'NO.	QTY.	MATERIAL	FINISHING	REMARK
⑦	MYLAR	——	1	9.0*9.0*0.075	——	——
⑥	COVER	——	1	NYLON	Black	——
⑤	HOUSING	——	1	NYLON	Black	——
④	SHELL	——	1	COPPER ALLOY	Ni Plating	——
③	TERMINAL	——	1	COPPER ALLOY	Au Plating	——
②	TERMINAL	——	1	COPPER ALLOY	Au Plating	——
①	TERMINAL	——	1	COPPER ALLOY	Au Plating	——

APPROVALS		DATE
DRAWN	JKUN.LU	2013/11/11
CHECKED		
APPROVALS		

HRO 韩荣® ELECTRONICS CO.,LTD

TITLE: DC POWER JACK

PART NO. DC-192

TOLERANCES ARE			ANGLE
	30~以上	±0.30	±2°
	10~30	±0.20	
	5~10	±0.15	
	~ 5	±0.10	

UNIT: mm SCALE: 1:1 PROJ:

DRAWING NO. —— SHEET 1 OF 1

ECN NO.	REV.	DATE.	DESCRIPTION.	CHANGE.	CHECK.	APPRO.
——	A	——	NEW	——	——	——