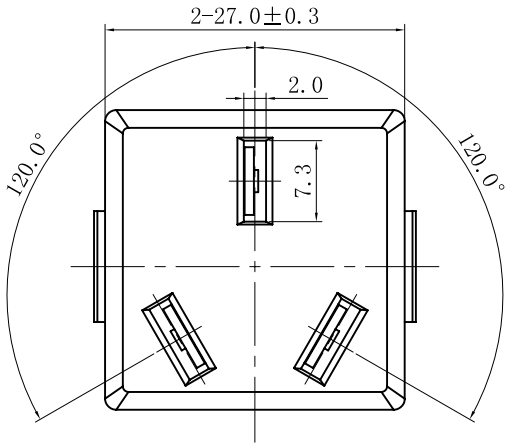

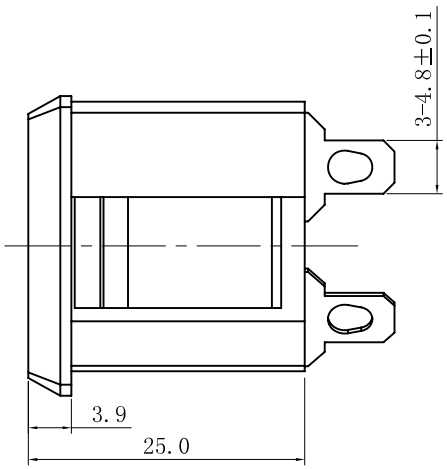

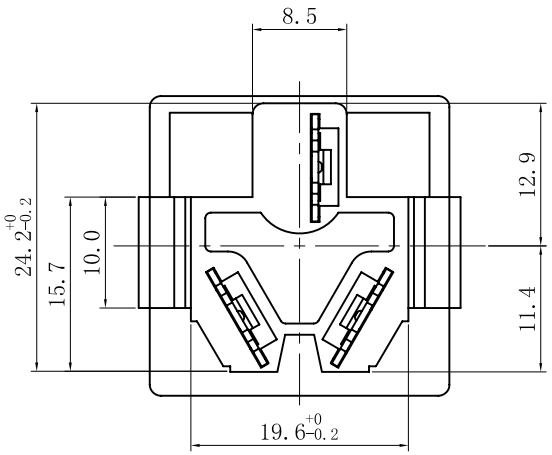

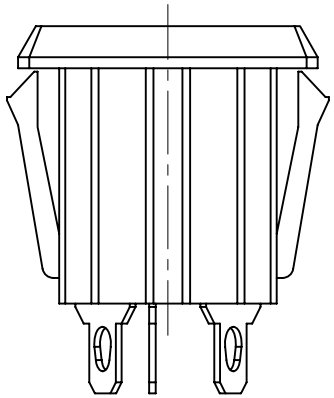

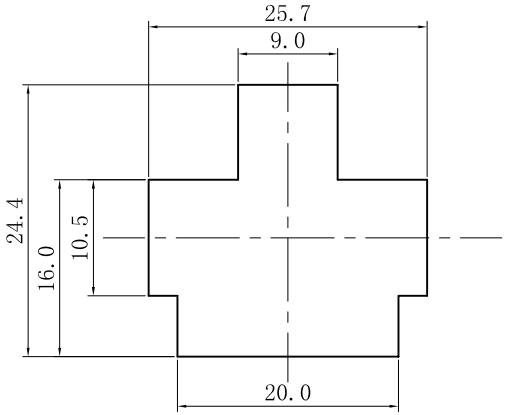

PANEL THICKNESS:1.0~1.5mm
PANEL HOLE SIZE

Rating :
10A 250V AC 3C

Insert And Extract Force: 1.36kgf~6.8kgf

Operating Life: ≥5000 cycles

Withstand Voltage: Between all terminals:2000VAC（50-60Hz)1min
terminals to Base:3750V AC（50-60Hz)1min
Leakage Current : 1mA

Insulation Resistance: ≥100MΩ 500V DC

Body Materil: NYLON 66 94V-2~0

A4				普通公差 COMMON TOLERANCE :		深圳市华灿天禄电子有限公司					
A3											
A2				UP TO 5	±0.20	单 位 UNIT	mm	投 影 PROJECTED		品 名 PRODUCT NAME	Ac Outlet
A1				ABOVE 5 TO 30	±0.30	绘 图 DRAWN BY	黄旭程	核 对 CHECKED BY		型 号 MODEL NO.	DB-F
				ABOVE 30	±0.50						
REV.	DATE	REVISION DESCRIPTION	ISSUE	ANGULAR	±5°	日 期 DATE	2015. 8. 25	核 准 APPROVAL BY		料 号 PART NO.	DB-F-C3-C